Take-offs

Description

- **take-off/starting collar**
- **installed on flat side of duct or plenum**
- **available in diameters 3"- 60"**

Ordering Example

	Type	⌀d_1
Gasketed, G-3	ILG	aa
Nongasketed, G-0	IL	aa

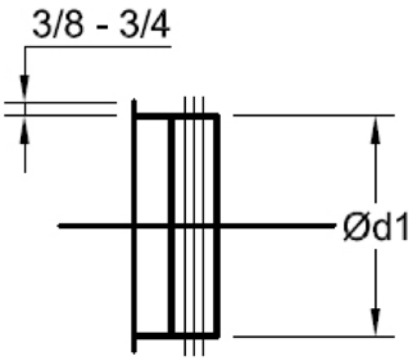

ILG/ILRG

Description

- **stamped radiused bellmouth take-off**
- **available in 4-16 inch (except 11-inch**
- **installed on flat side of duct or plenum**
- **available in diameters 3"- 60"**

Ordering Example

	Type	⌀d_1
Gasketed, G-3	ILRG	aa
Nongasketed, G-0	ILR	aa

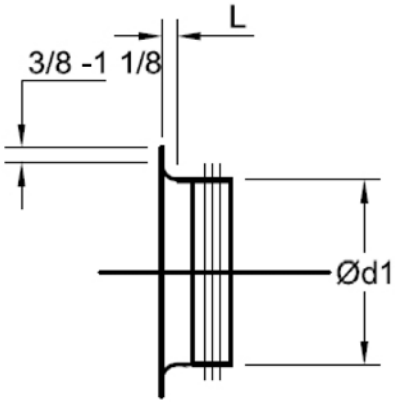

THIS COMPANY AND ITS PRODUCTS ARE PROTECTED BY PATENTS AND REGISTERED TRADEMARKS.
COPYRIGHT 2011 ALL RIGHTS RESERVED. ALL PREVIOUS VERSIONS OBSOLETE.

GUSTAFSON
We Are Better Together