Elbows

Description

- **45° elbow**
- **die stamped**
- **continuous stitch welded**
- **rolled edges**

Ordering Example

	Type	⌀d_1
Gasketed, G-3	BSG 45	aa
Nongasketed, G-0	BS 45	aa

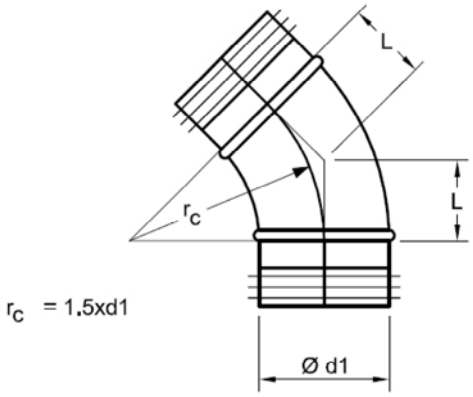

BSG 45/BSFG 45

Description

- **45°elbow**
- **3-piece gored, standing seam**
- **gore locked and internally sealed**
- **rolled edges**

Ordering Example

	Type	⌀d_1
Gasketed, G-3	BSFG 45	aa
Nongasketed, G-0	BSF 45	aa

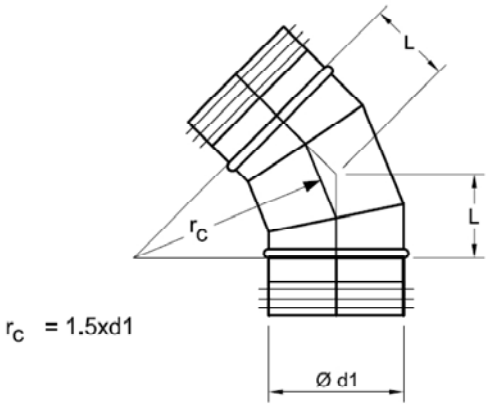

THIS COMPANY AND ITS PRODUCTS ARE PROTECTED BY PATENTS AND REGISTERED TRADEMARKS.
COPYRIGHT 2011 ALL RIGHTS RESERVED. ALL PREVIOUS VERSIONS OBSOLETE.

GUSTAFSON
We Are Better Together