Elbows

Description

- **45° elbow**
- **die stamped**
- **continuous stitch welded**
- **rolled edges**

Ordering Example

	Type	⌀d_1
Gasketed, G-3	BG 45	aa
Nongasketed, G-0	B 45	aa

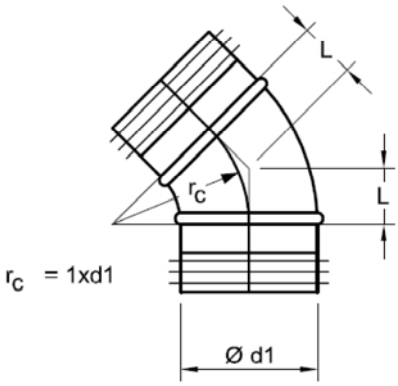

BG 45/BFG 45

Description

- **45° elbow**
- **3-piece gored, standing seam**
- **gore locked and internally sealed**
- **rolled edges**

Ordering Example

	Type	⌀d_1
Gasketed, G-3	BFG 45	aa
Nongasketed, G-0	BF 45	aa

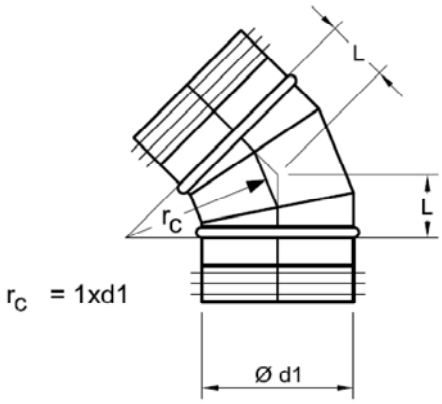

THIS COMPANY AND ITS PRODUCTS ARE PROTECTED BY PATENTS AND REGISTERED TRADEMARKS.
COPYRIGHT 2011 ALL RIGHTS RESERVED. ALL PREVIOUS VERSIONS OBSOLETE.

GUSTAFSON
We Are Better Together