DX13S Commercial

3-, 4-, & 5-Ton, Three-Phase Split System Air Conditioner

Cooling Capacity: 36,000 - 60,000 BTU/h

■ ***Contents***

Nomenclature 2
Product Specifications 3
Expanded Cooling Data 4
AHRI Ratings 16
Dimensions 18
Wiring Diagrams 19
Accessories 21

■ ***Standard Features***

- Energy-efficient compressor
- Factory-installed filter drier
- Copper tube/ enhanced aluminum fin coil
- Service valves with sweat connections and easy-access gauge ports
- Contactor with lug connection
- Ground lug connection
- Units meet the performance outlined in Table 6.8.1B of ASHRAE Standard 90.1-2010
- AHRI Certified
- ETL Listed

■ ***Cabinet Features***

- Innovative louvered sound control top design
- Steel louver coil guard
- Heavy-gauge galvanized-steel cabinet
- Attractive Nickel Gray powder-paint finish
- Top and side maintenance access
- Single-panel access to controls with space provided for field-installed accessories
- When properly anchored, meets the 2010 Florida Building Code unit integrity requirements for hurricane-type winds (Anchor bracket kits available.)

* Complete warranty details available from your local distributor or manufacturer's representative or at www.daikincomfort.com.

D	X	13	S	A	036	3	A	A
1	2	3,4	5	6	7,8,9	10	11	12

Brand
D - Daikin

Type
X - AC R-410A
Z - HP R-410A

EER
13 -13 SEER

Compressor
S - Single Stage

Feature Set
A - Base

Tonnage Nominal
036 - 3 tons
048 - 4 tons
060 - 5 tons

Voltage
3 - 208/230 V Three-Phase 60 Hz
4 - 460 V Three-Phase 60 Hz

Engineering
Major revision

Engineering
Minor revision

	DX13SA 0363A*	DX13SA 0364A*	DX13SA 0483A*	DX13SA 0484A*	DX13SA 0603A*	DX13SA 0604A*
Cooling Capacities						
Nominal Cooling (BTU/h)	36,000	36,000	48,000	48,000	60,000	60,000
SEER	13	13	13	13	13	13
Decibels	74	74	76	76	72	72
Compressor						
RLA / LRA	10.4/73	5.8/38.0	13.1/83.1	6.1/41	16/110	7.8/52
Type	Scroll	Scroll	Scroll	Scroll	Scroll	Scroll
Condenser Fan Motor						
Horsepower	1/6	1/6	1/4	1/4	1/4	1/4
FLA	1.1	0.6	1.2	0.8	1.3	0.8
Refrigeration System						
Refrigerant Line Size						
Liquid Line Size (“O.D.)	⅜"	⅜"	⅜"	⅜"	⅜"	⅜"
Suction Line Size (“O.D.)	¾"	¾"	1⅛"	1⅛"	1⅛"	1⅛"
Refrigerant Connection Size						
Liquid Valve Size (“O.D.)	⅜"	⅜"	⅜"	⅜"	⅜"	⅜"
Suction Valve Size (“O.D.) [3 4]	¾" [3]	¾" [3]	⅞" [4]	⅞" [4]	⅞" [4]	⅞" [4]
Valve Type	Sweat	Sweat	Sweat	Sweat	Sweat	Sweat
Refrigerant Charge (oz.)	68	68	97	97	130	111
Piston Size	0.07	0.07	0.08	0.08	0.086	0.086
Electrical Data						
AC Volts/ Hz/ Phase	208-230/ 60/ 3	460/60/3	208-230/ 60/ 3	460/ 60/ 3	208-230/ 60/ 3	460/ 60/ 3
Min. Circuit Ampacity [1]	14.1	7.9	17.6	8.4	21.3	10.6
Max. Overcurrent Device [2]	20	15	30	15	35	15
Min / Max Volts	197/253	197/253	197/253	414/506	197/253	414/506
Electrical Conduit Size	½" or ¾"	½" or ¾"	½" or ¾"	½" or ¾"	½" or ¾"	½" or ¾"
Ship Weight (lbs)	196	196	190	189	301	301

1 Wire size should be determined in accordance with National Electrical Codes; extensive wire runs will require larger wire sizes
2 Must use time-delay fuses or HACR-type circuit breakers of the same size as noted.
3 Installer will need to supply ¾” to ⅞” adapters for suction line connections.
4 Installer will need to supply ⅞” to 1⅛” adapters for suction line connections.

Notes

- Always check the S&R plate for electrical data on the unit being installed.
- Unit is charged with refrigerant for 15’ of ⅜” liquid line. System charge must be adjusted per Installation Instructions Final Charge Procedure.

			Outdoor Ambient Temperature																							
			65				75				85				95				105				115			
			Entering Indoor Wet Bulb Temperature																							
IDB	Airflow		59	63	67	71	59	63	67	71	59	63	67	71	59	63	67	71	59	63	67	71	59	63	67	71
70	1050	MBh	31.1	32.2	35.3	-	30.4	31.5	34.5	-	29.6	30.7	33.7	-	28.9	30.0	32.8	-	27.5	28.5	31.2	-	25.4	26.4	28.9	-
		S/T	0.70	0.58	0.40	-	0.72	0.60	0.42	-	0.74	0.62	0.43	-	0.76	0.64	0.44	-	0.79	0.66	0.46	-	0.80	0.67	0.46	-
		ΔT	19	16	12	-	19	17	13	-	19	17	13	-	19	17	13	-	19	16	13	-	18	15	12	-
		kW	2.42	2.47	2.54	-	2.60	2.65	2.73	-	2.75	2.81	2.89	-	2.88	2.94	3.04	-	3.00	3.06	3.16	-	3.10	3.16	3.26	-
		Amps	6.1	6.3	6.5	-	6.6	6.7	7.0	-	7.1	7.3	7.5	-	7.6	7.8	8.0	-	8.1	8.3	8.5	-	8.5	8.7	9.0	-
		HI PR	224	242	255	-	252	271	286	-	286	308	326	-	326	351	371	-	367	395	417	-	406	436	461	-
		LO PR	103	109	120	-	109	116	126	-	113	120	131	-	119	126	138	-	124	132	144	-	129	137	149	-
	1200	MBh	33.7	34.9	38.2	-	32.9	34.1	37.4	-	32.1	33.3	36.5	-	31.3	32.5	35.6	-	29.8	30.8	33.8	-	27.6	28.6	31.3	-
		S/T	0.72	0.60	0.42	-	0.75	0.62	0.43	-	0.77	0.64	0.44	-	0.79	0.66	0.46	-	0.82	0.69	0.48	-	0.83	0.69	0.48	-
		ΔT	19	16	12	-	19	16	12	-	19	16	12	-	19	16	12	-	19	16	12	-	17	15	11	-
		kW	2.48	2.53	2.60	-	2.66	2.71	2.79	-	2.81	2.87	2.96	-	2.95	3.02	3.11	-	3.07	3.14	3.24	-	3.17	3.24	3.34	-
		Amps	6.3	6.4	6.6	-	6.8	6.9	7.1	-	7.3	7.5	7.7	-	7.8	8.0	8.3	-	8.3	8.5	8.8	-	8.8	9.0	9.3	-
		HI PR	231	249	263	-	260	279	295	-	295	318	336	-	336	362	382	-	378	407	430	-	418	450	475	-
		LO PR	106	113	123	-	112	119	130	-	116	124	135	-	122	130	142	-	128	136	149	-	133	141	154	-
	1350	MBh	34.7	36.0	39.4	-	33.9	35.1	38.5	-	33.1	34.3	37.6	-	32.3	33.4	36.6	-	30.7	31.8	34.8	-	28.4	29.4	32.2	-
		S/T	0.76	0.63	0.44	-	0.78	0.65	0.45	-	0.80	0.67	0.47	-	0.83	0.69	0.48	-	0.86	0.72	0.50	-	0.87	0.73	0.50	-
		ΔT	18	15	12	-	18	16	12	-	18	16	12	-	18	16	12	-	18	16	12	-	17	15	11	-
		kW	2.50	2.55	2.62	-	2.68	2.73	2.81	-	2.84	2.90	2.98	-	2.98	3.04	3.13	-	3.10	3.16	3.26	-	3.20	3.27	3.37	-
		Amps	6.3	6.5	6.7	-	6.8	7.0	7.2	-	7.4	7.6	7.8	-	7.9	8.1	8.3	-	8.4	8.6	8.9	-	8.9	9.1	9.4	-
		HI PR	234	252	266	-	262	282	298	-	298	321	339	-	340	366	386	-	382	411	434	-	422	454	480	-
		LO PR	107	114	124	-	113	120	131	-	118	125	137	-	124	131	144	-	130	138	150	-	134	143	156	-
75	1050	MBh	31.6	32.5	35.2	37.8	30.9	31.8	34.4	36.9	30.1	31.0	33.6	36.1	29.4	**30.3**	32.8	35.2	27.9	28.8	31.1	33.4	25.9	26.6	28.8	31.0
		S/T	0.79	0.71	0.54	0.34	0.82	0.73	0.55	0.36	0.84	0.75	0.57	0.37	0.87	**0.78**	0.59	0.38	0.90	0.81	0.61	0.39	0.91	0.81	0.61	0.40
		ΔT	22	20	17	11	22	20	17	12	22	20	17	12	22	**21**	17	12	22	20	17	11	21	19	16	11
		kW	2.44	2.49	2.56	2.64	2.62	2.67	2.75	2.83	2.77	2.83	2.91	3.01	2.91	**2.97**	3.06	3.16	3.02	3.09	3.18	3.29	3.12	3.19	3.29	3.40
		Amps	6.2	6.3	6.5	6.7	6.6	6.8	7.0	7.3	7.2	7.4	7.6	7.9	7.7	**7.9**	8.1	8.4	8.2	8.3	8.6	8.9	8.6	8.8	9.1	9.5
		HI PR	227	244	258	269	254	274	289	302	289	311	329	343	330	**355**	375	391	371	399	421	439	410	441	466	486
		LO PR	104	111	121	129	110	117	128	136	114	121	133	141	120	**128**	139	148	126	134	146	155	130	138	151	161
	1200	MBh	34.2	35.3	38.2	41.0	33.5	34.4	37.3	40.0	32.7	33.6	36.4	39.1	31.9	**32.8**	35.5	38.1	30.3	31.2	33.7	36.2	28.0	28.9	31.2	33.5
		S/T	0.82	0.73	0.56	0.36	0.85	0.76	0.58	0.37	0.87	0.78	0.59	0.38	0.90	**0.80**	0.61	0.39	0.93	0.83	0.63	0.41	0.94	0.84	0.64	0.41
		ΔT	22	20	16	11	22	20	16	11	22	20	16	11	22	**20**	17	11	22	20	16	11	20	19	15	11
		kW	2.50	2.55	2.62	2.70	2.68	2.73	2.82	2.90	2.84	2.90	2.98	3.08	2.98	**3.04**	3.13	3.23	3.10	3.16	3.26	3.37	3.20	3.27	3.37	3.48
		Amps	6.3	6.5	6.7	6.9	6.8	7.0	7.2	7.5	7.4	7.6	7.8	8.1	7.9	**8.1**	8.3	8.6	8.4	8.6	8.9	9.2	8.9	9.1	9.4	9.7
		HI PR	234	252	266	277	262	282	298	311	298	321	339	354	340	**366**	386	403	382	411	434	453	422	454	480	501
		LO PR	107	114	124	133	113	120	131	140	118	125	137	146	124	**131**	144	153	130	138	150	160	134	143	156	166
	1350	MBh	35.3	36.3	39.3	42.2	34.5	35.5	38.4	41.2	33.6	34.6	37.5	40.2	32.8	**33.8**	36.6	39.3	31.2	32.1	34.7	37.3	28.9	29.7	32.2	34.5
		S/T	0.86	0.77	0.58	0.37	0.89	0.80	0.60	0.39	0.91	0.82	0.62	0.40	0.94	**0.84**	0.64	0.41	0.98	0.88	0.66	0.43	0.99	0.88	0.67	0.43
		ΔT	21	19	16	11	21	19	16	11	21	19	16	11	21	**19**	16	11	21	19	16	11	19	18	15	10
		kW	2.52	2.57	2.64	2.72	2.70	2.75	2.84	2.92	2.86	2.92	3.01	3.10	3.00	**3.06**	3.16	3.26	3.12	3.19	3.29	3.39	3.23	3.29	3.40	3.51
		Amps	6.4	6.5	6.7	7.0	6.9	7.0	7.3	7.5	7.5	7.6	7.9	8.2	8.0	**8.1**	8.4	8.7	8.5	8.7	8.9	9.3	8.9	9.2	9.5	9.8
		HI PR	236	254	268	280	265	285	301	314	301	324	342	357	343	**369**	390	407	386	415	439	458	427	459	485	506
		LO PR	108	115	126	134	114	122	133	141	119	126	138	147	125	**133**	145	154	131	139	152	162	135	144	157	167

IDB: Entering Indoor Dry Bulb Temperature
High and low pressures are measured at the liquid and suction service valves.

Shaded area is ACCA (TVA) conditions.

KW=Total system power
Amps = outdoor unit amps (comp.+fan)

Expanded Cooling Data — DX13SA0363A*/CA*F3636*6D* (cont.)

			Outdoor Ambient Temperature																							
			65				75				85				95				105				115			
			Entering Indoor Wet Bulb Temperature																							
IDB	Airflow		59	63	67	71	59	63	67	71	59	63	67	71	59	63	67	71	59	63	67	71	59	63	67	71
80	1050	MBh	32.2	32.9	35.1	37.5	31.4	32.1	34.3	36.7	30.7	31.3	33.5	35.8	29.9	30.6	32.7	34.9	28.4	29.1	31.0	33.2	26.3	26.9	28.8	30.7
		S/T	0.87	0.81	0.66	0.49	0.90	0.84	0.69	0.51	0.92	0.86	0.70	0.53	0.95	0.89	0.73	0.54	0.99	0.93	0.75	0.56	1.00	0.93	0.76	0.57
		ΔT	24	23	20	16	25	24	21	16	25	24	21	16	25	24	21	17	25	24	20	16	23	22	19	15
		kW	2.46	2.51	2.58	2.66	2.64	2.69	2.77	2.86	2.79	2.85	2.94	3.03	2.93	2.99	3.08	3.18	3.05	3.11	3.21	3.31	3.15	3.21	3.32	3.42
		Amps	6.2	6.4	6.6	6.8	6.7	6.9	7.1	7.3	7.3	7.4	7.7	8.0	7.7	7.9	8.2	8.5	8.2	8.4	8.7	9.0	8.7	8.9	9.2	9.5
		HI PR	229	246	260	271	257	277	292	305	292	315	332	346	333	358	378	395	375	403	426	444	414	445	470	490
		LO PR	105	112	122	130	111	118	129	137	115	123	134	143	121	129	141	150	127	135	147	157	131	140	152	162
	1200	MBh	34.9	35.6	38.1	40.7	34.0	34.8	37.2	39.7	33.2	34.0	36.3	38.8	32.4	33.1	**35.4**	37.8	30.8	31.5	33.6	36.0	28.5	29.2	31.2	33.3
		S/T	0.90	0.84	0.69	0.51	0.93	0.87	0.71	0.53	0.96	0.90	0.73	0.55	0.99	0.93	**0.75**	0.56	1.00	0.96	0.78	0.58	1.00	0.97	0.79	0.59
		ΔT	24	23	20	16	24	23	20	16	24	23	20	16	25	23	**20**	16	24	23	20	16	22	22	19	15
		kW	2.52	2.57	2.64	2.72	2.70	2.75	2.84	2.93	2.86	2.92	3.01	3.10	3.00	3.06	**3.16**	3.26	3.12	3.19	3.29	3.39	3.23	3.29	3.40	3.51
		Amps	6.4	6.5	6.7	7.0	6.9	7.0	7.3	7.5	7.5	7.6	7.9	8.2	8.0	8.1	**8.4**	8.7	8.5	8.7	8.9	9.3	8.9	9.2	9.5	9.8
		HI PR	236	254	268	280	265	285	301	314	301	324	342	357	343	369	**390**	407	386	415	439	458	427	459	485	506
		LO PR	108	115	126	134	114	122	133	141	119	126	138	147	125	133	**145**	154	131	139	152	162	135	144	157	167
	1350	MBh	35.9	36.7	39.2	41.9	35.1	35.8	38.3	40.9	34.2	35.0	37.4	40.0	33.4	34.1	36.5	39.0	31.7	32.4	34.6	37.0	29.4	30.0	32.1	34.3
		S/T	0.94	0.88	0.72	0.54	1.00	0.92	0.75	0.56	1.00	0.94	0.76	0.57	1.00	0.97	0.79	0.59	1.00	1.00	0.82	0.61	1.00	1.00	0.83	0.62
		ΔT	23	22	19	15	24	22	19	16	23	22	19	16	23	23	20	16	22	22	19	15	20	20	18	14
		kW	2.54	2.59	2.66	2.74	2.72	2.77	2.86	2.95	2.88	2.94	3.03	3.13	3.02	3.09	3.19	3.29	3.15	3.21	3.32	3.42	3.25	3.32	3.43	3.54
		Amps	6.4	6.6	6.8	7.0	6.9	7.1	7.3	7.6	7.5	7.7	8.0	8.2	8.0	8.2	8.5	8.8	8.5	8.7	9.0	9.4	9.0	9.2	9.5	9.9
		HI PR	238	257	271	283	268	288	304	317	304	328	346	361	347	373	394	411	390	420	443	462	431	464	490	511
		LO PR	109	116	127	135	116	123	134	143	120	128	139	148	126	134	146	156	132	141	153	163	137	145	159	169
85	1050	MBh	32.7	33.4	34.9	37.3	32.0	32.6	34.1	36.4	31.2	31.8	33.3	35.6	30.5	31.0	32.5	34.7	28.9	29.5	30.9	33.0	26.8	27.3	28.6	30.5
		S/T	0.91	0.88	0.79	0.64	0.94	0.91	0.82	0.67	0.97	0.93	0.84	0.68	1.00	0.96	0.87	0.70	1.00	1.00	0.90	0.73	1.00	1.00	0.91	0.74
		ΔT	26	26	24	21	26	26	25	21	26	26	25	21	27	26	25	21	25	26	24	21	23	24	23	20
		kW	2.48	2.53	2.60	2.68	2.66	2.71	2.79	2.88	2.81	2.87	2.96	3.05	2.95	3.01	3.11	3.21	3.07	3.14	3.23	3.34	3.17	3.24	3.34	3.45
		Amps	6.3	6.4	6.6	6.9	6.8	6.9	7.1	7.4	7.3	7.5	7.7	8.0	7.8	8.0	8.3	8.6	8.3	8.5	8.8	9.1	8.8	9.0	9.3	9.6
		HI PR	231	249	263	274	260	279	295	308	295	318	335	350	336	362	382	399	378	407	430	448	418	450	475	495
		LO PR	106	113	123	131	112	119	130	139	116	124	135	144	122	130	142	151	128	136	149	159	133	141	154	164
	1200	MBh	35.5	36.2	37.9	40.4	34.6	35.3	37.0	39.5	33.8	34.5	36.1	38.5	33.0	33.6	35.2	37.6	31.3	31.9	33.5	35.7	29.0	29.6	31.0	33.1
		S/T	0.94	0.91	0.82	0.67	0.98	0.94	0.85	0.69	1.00	0.97	0.87	0.71	1.00	1.00	0.90	0.73	1.00	1.00	0.93	0.76	1.00	1.00	0.94	0.76
		ΔT	26	25	24	21	26	26	24	21	26	26	24	21	25	26	24	21	24	24	24	21	22	23	22	19
		kW	2.54	2.59	2.66	2.74	2.72	2.77	2.86	2.95	2.88	2.94	3.03	3.13	3.02	3.09	3.19	3.29	3.15	3.21	3.32	3.42	3.25	3.32	3.43	3.54
		Amps	6.4	6.6	6.8	7.0	6.9	7.1	7.3	7.6	7.5	7.7	8.0	8.2	8.0	8.2	8.5	8.8	8.5	8.7	9.0	9.4	9.0	9.2	9.5	9.9
		HI PR	238	257	271	283	268	288	304	317	304	328	346	361	347	373	394	411	390	420	443	462	431	464	490	511
		LO PR	109	116	127	135	116	123	134	143	120	128	139	148	126	134	146	156	132	141	153	163	137	145	159	169
	1350	MBh	36.5	37.2	39.0	41.6	35.7	36.4	38.1	40.6	34.8	35.5	37.2	39.7	34.0	34.6	36.3	38.7	32.3	32.9	34.5	36.8	29.9	30.5	31.9	34.1
		S/T	0.99	0.95	0.86	0.70	1.00	0.99	0.89	0.72	1.00	1.00	0.91	0.74	1.00	1.00	0.94	0.77	1.00	1.00	0.98	0.80	1.00	1.00	0.99	0.80
		ΔT	25	24	23	20	24	24	23	20	24	24	23	20	23	24	23	20	22	22	23	20	20	21	21	19
		kW	2.55	2.61	2.68	2.76	2.74	2.80	2.88	2.97	2.90	2.96	3.06	3.15	3.05	3.11	3.21	3.31	3.17	3.24	3.34	3.45	3.28	3.35	3.46	3.57
		Amps	6.5	6.7	6.9	7.1	7.0	7.2	7.4	7.7	7.6	7.8	8.0	8.3	8.1	8.3	8.6	8.9	8.6	8.8	9.1	9.4	9.1	9.3	9.6	10.0
		HI PR	241	259	274	285	270	291	307	320	307	331	349	364	350	377	398	415	394	424	448	467	435	468	495	516
		LO PR	110	117	128	137	117	124	135	144	121	129	141	150	127	135	148	158	133	142	155	165	138	147	160	171

IDB: Entering Indoor Dry Bulb Temperature
High and low pressures are measured at the liquid and suction service valves.

Shaded area is AHRI conditions.

KW=Total system power
Amps = outdoor unit amps (comp.+fan)

			Outdoor Ambient Temperature																							
			65				75				85				95				105				115			
			Entering Indoor Wet Bulb Temperature																							
IDB	Airflow		59	63	67	71	59	63	67	71	59	63	67	71	59	63	67	71	59	63	67	71	59	63	67	71
70	1050	MBh	31.1	32.2	35.3	-	30.4	31.5	34.5	-	29.6	30.7	33.7	-	28.9	30.0	32.8	-	27.5	28.5	31.2	-	25.4	26.4	28.9	-
		S/T	0.70	0.58	0.40	-	0.72	0.60	0.42	-	0.74	0.62	0.43	-	0.76	0.64	0.44	-	0.79	0.66	0.46	-	0.80	0.67	0.46	-
		ΔT	19	16	12	-	19	17	13	-	19	17	13	-	19	17	13	-	19	16	13	-	18	15	12	-
		kW	2.42	2.47	2.54	-	2.60	2.65	2.73	-	2.75	2.81	2.89	-	2.88	2.94	3.04	-	3.00	3.06	3.16	-	3.10	3.16	3.26	-
		Amps	6.1	6.3	6.5	-	6.6	6.7	7.0	-	7.1	7.3	7.5	-	7.6	7.8	8.0	-	8.1	8.3	8.5	-	8.5	8.7	9.0	-
		HI PR	224	242	255	-	252	271	286	-	286	308	326	-	326	351	371	-	367	395	417	-	406	436	461	-
		LO PR	103	109	120	-	109	116	126	-	113	120	131	-	119	126	138	-	124	132	144	-	129	137	149	-
	1200	MBh	33.7	34.9	38.2	-	32.9	34.1	37.4	-	32.1	33.3	36.5	-	31.3	32.5	35.6	-	29.8	30.8	33.8	-	27.6	28.6	31.3	-
		S/T	0.72	0.60	0.42	-	0.75	0.62	0.43	-	0.77	0.64	0.44	-	0.79	0.66	0.46	-	0.82	0.69	0.48	-	0.83	0.69	0.48	-
		ΔT	19	16	12	-	19	16	12	-	19	16	12	-	19	16	12	-	19	16	12	-	17	15	11	-
		kW	2.48	2.53	2.60	-	2.66	2.71	2.79	-	2.81	2.87	2.96	-	2.95	3.02	3.11	-	3.07	3.14	3.24	-	3.17	3.24	3.34	-
		Amps	6.3	6.4	6.6	-	6.8	6.9	7.1	-	7.3	7.5	7.7	-	7.8	8.0	8.3	-	8.3	8.5	8.8	-	8.8	9.0	9.3	-
		HI PR	231	249	263	-	260	279	295	-	295	318	336	-	336	362	382	-	378	407	430	-	418	450	475	-
		LO PR	106	113	123	-	112	119	130	-	116	124	135	-	122	130	142	-	128	136	149	-	133	141	154	-
	1350	MBh	34.7	36.0	39.4	-	33.9	35.1	38.5	-	33.1	34.3	37.6	-	32.3	33.4	36.6	-	30.7	31.8	34.8	-	28.4	29.4	32.2	-
		S/T	0.76	0.63	0.44	-	0.78	0.65	0.45	-	0.80	0.67	0.47	-	0.83	0.69	0.48	-	0.86	0.72	0.50	-	0.87	0.73	0.50	-
		ΔT	18	15	12	-	18	16	12	-	18	16	12	-	18	16	12	-	18	16	12	-	17	15	11	-
		kW	2.50	2.55	2.62	-	2.68	2.73	2.81	-	2.84	2.90	2.98	-	2.98	3.04	3.13	-	3.10	3.16	3.26	-	3.20	3.27	3.37	-
		Amps	6.3	6.5	6.7	-	6.8	7.0	7.2	-	7.4	7.6	7.8	-	7.9	8.1	8.3	-	8.4	8.6	8.9	-	8.9	9.1	9.4	-
		HI PR	234	252	266	-	262	282	298	-	298	321	339	-	340	366	386	-	382	411	434	-	422	454	480	-
		LO PR	107	114	124	-	113	120	131	-	118	125	137	-	124	131	144	-	130	138	150	-	134	143	156	-
75	1050	MBh	31.6	32.5	35.2	37.8	30.9	31.8	34.4	36.9	30.1	31.0	33.6	36.1	29.4	**30.3**	32.8	35.2	27.9	28.8	31.1	33.4	25.9	26.6	28.8	31.0
		S/T	0.79	0.71	0.54	0.34	0.82	0.73	0.55	0.36	0.84	0.75	0.57	0.37	0.87	**0.78**	0.59	0.38	0.90	0.81	0.61	0.39	0.91	0.81	0.61	0.40
		ΔT	22	20	17	11	22	20	17	12	22	20	17	12	22	**21**	17	12	22	20	17	11	21	19	16	11
		kW	2.44	2.49	2.56	2.64	2.62	2.67	2.75	2.83	2.77	2.83	2.91	3.01	2.91	**2.97**	3.06	3.16	3.02	3.09	3.18	3.29	3.12	3.19	3.29	3.40
		Amps	6.2	6.3	6.5	6.7	6.6	6.8	7.0	7.3	7.2	7.4	7.6	7.9	7.7	**7.9**	8.1	8.4	8.2	8.3	8.6	8.9	8.6	8.8	9.1	9.5
		HI PR	227	244	258	269	254	274	289	302	289	311	329	343	330	**355**	375	391	371	399	421	439	410	441	466	486
		LO PR	104	111	121	129	110	117	128	136	114	121	133	141	120	**128**	139	148	126	134	146	155	130	138	151	161
	1200	MBh	34.2	35.3	38.2	41.0	33.5	34.4	37.3	40.0	32.7	33.6	36.4	39.1	31.9	**32.8**	35.5	38.1	30.3	31.2	33.7	36.2	28.0	28.9	31.2	33.5
		S/T	0.82	0.73	0.56	0.36	0.85	0.76	0.58	0.37	0.87	0.78	0.59	0.38	0.90	**0.80**	0.61	0.39	0.93	0.83	0.63	0.41	0.94	0.84	0.64	0.41
		ΔT	22	20	16	11	22	20	16	11	22	20	16	11	22	**20**	17	11	22	20	16	11	20	19	15	11
		kW	2.50	2.55	2.62	2.70	2.68	2.73	2.82	2.90	2.84	2.90	2.98	3.08	2.98	**3.04**	3.13	3.23	3.10	3.16	3.26	3.37	3.20	3.27	3.37	3.48
		Amps	6.3	6.5	6.7	6.9	6.8	7.0	7.2	7.5	7.4	7.6	7.8	8.1	7.9	**8.1**	8.3	8.6	8.4	8.6	8.9	9.2	8.9	9.1	9.4	9.7
		HI PR	234	252	266	277	262	282	298	311	298	321	339	354	340	**366**	386	403	382	411	434	453	422	454	480	501
		LO PR	107	114	124	133	113	120	131	140	118	125	137	146	124	**131**	144	153	130	138	150	160	134	143	156	166
	1350	MBh	35.3	36.3	39.3	42.2	34.5	35.5	38.4	41.2	33.6	34.6	37.5	40.2	32.8	**33.8**	36.6	39.3	31.2	32.1	34.7	37.3	28.9	29.7	32.2	34.5
		S/T	0.86	0.77	0.58	0.37	0.89	0.80	0.60	0.39	0.91	0.82	0.62	0.40	0.94	**0.84**	0.64	0.41	0.98	0.88	0.66	0.43	0.99	0.88	0.67	0.43
		ΔT	21	19	16	11	21	19	16	11	21	19	16	11	21	**19**	16	11	21	19	16	11	19	18	15	10
		kW	2.52	2.57	2.64	2.72	2.70	2.75	2.84	2.92	2.86	2.92	3.01	3.10	3.00	**3.06**	3.16	3.26	3.12	3.19	3.29	3.39	3.23	3.29	3.40	3.51
		Amps	6.4	6.5	6.7	7.0	6.9	7.0	7.3	7.5	7.5	7.6	7.9	8.2	8.0	**8.1**	8.4	8.7	8.5	8.7	8.9	9.3	8.9	9.2	9.5	9.8
		HI PR	236	254	268	280	265	285	301	314	301	324	342	357	343	**369**	390	407	386	415	439	458	427	459	485	506
		LO PR	108	115	126	134	114	122	133	141	119	126	138	147	125	**133**	145	154	131	139	152	162	135	144	157	167

IDB: Entering Indoor Dry Bulb Temperature
High and low pressures are measured at the liquid and suction service valves.

Shaded area is ACCA (TVA) conditions.

KW=Total system power
Amps = outdoor unit amps (comp.+fan)

Expanded Cooling Data — DX13SA0364A*/CA*F3636*6D* (cont.)

			Outdoor Ambient Temperature																							
			65				75				85				95				105				115			
			Entering Indoor Wet Bulb Temperature																							
IDB	Airflow		59	63	67	71	59	63	67	71	59	63	67	71	59	63	67	71	59	63	67	71	59	63	67	71
80	1050	MBh	32.2	32.9	35.1	37.5	31.4	32.1	34.3	36.7	30.7	31.3	33.5	35.8	29.9	30.6	32.7	34.9	28.4	29.1	31.0	33.2	26.3	26.9	28.8	30.7
		S/T	0.87	0.81	0.66	0.49	0.90	0.84	0.69	0.51	0.92	0.86	0.70	0.53	0.95	0.89	0.73	0.54	0.99	0.93	0.75	0.56	1.00	0.93	0.76	0.57
		ΔT	24	23	20	16	25	24	21	16	25	24	21	16	25	24	21	17	25	24	20	16	23	22	19	15
		kW	2.46	2.51	2.58	2.66	2.64	2.69	2.77	2.86	2.79	2.85	2.94	3.03	2.93	2.99	3.08	3.18	3.05	3.11	3.21	3.31	3.15	3.21	3.32	3.42
		Amps	6.2	6.4	6.6	6.8	6.7	6.9	7.1	7.3	7.3	7.4	7.7	8.0	7.7	7.9	8.2	8.5	8.2	8.4	8.7	9.0	8.7	8.9	9.2	9.5
		HI PR	229	246	260	271	257	277	292	305	292	315	332	346	333	358	378	395	375	403	426	444	414	445	470	490
		LO PR	105	112	122	130	111	118	129	137	115	123	134	143	121	129	141	150	127	135	147	157	131	140	152	162
	1200	MBh	34.9	35.6	38.1	40.7	34.0	34.8	37.2	39.7	33.2	34.0	36.3	38.8	32.4	33.1	**35.4**	37.8	30.8	31.5	33.6	36.0	28.5	29.2	31.2	33.3
		S/T	0.90	0.84	0.69	0.51	0.93	0.87	0.71	0.53	0.96	0.90	0.73	0.55	0.99	0.93	**0.75**	0.56	1.00	0.96	0.78	0.58	1.00	0.97	0.79	0.59
		ΔT	24	23	20	16	24	23	20	16	24	23	20	16	25	23	**20**	16	24	23	20	16	22	22	19	15
		kW	2.52	2.57	2.64	2.72	2.70	2.75	2.84	2.93	2.86	2.92	3.01	3.10	3.00	3.06	**3.16**	3.26	3.12	3.19	3.29	3.39	3.23	3.29	3.40	3.51
		Amps	6.4	6.5	6.7	7.0	6.9	7.0	7.3	7.5	7.5	7.6	7.9	8.2	8.0	8.1	**8.4**	8.7	8.5	8.7	8.9	9.3	8.9	9.2	9.5	9.8
		HI PR	236	254	268	280	265	285	301	314	301	324	342	357	343	369	**390**	407	386	415	439	458	427	459	485	506
		LO PR	108	115	126	134	114	122	133	141	119	126	138	147	125	133	**145**	154	131	139	152	162	135	144	157	167
	1350	MBh	35.9	36.7	39.2	41.9	35.1	35.8	38.3	40.9	34.2	35.0	37.4	40.0	33.4	34.1	36.5	39.0	31.7	32.4	34.6	37.0	29.4	30.0	32.1	34.3
		S/T	0.94	0.88	0.72	0.54	1.00	0.92	0.75	0.56	1.00	0.94	0.76	0.57	1.00	0.97	0.79	0.59	1.00	1.00	0.82	0.61	1.00	1.00	0.83	0.62
		ΔT	23	22	19	15	24	22	19	16	23	22	19	16	23	23	20	16	22	22	19	15	20	20	18	14
		kW	2.54	2.59	2.66	2.74	2.72	2.77	2.86	2.95	2.88	2.94	3.03	3.13	3.02	3.09	3.19	3.29	3.15	3.21	3.32	3.42	3.25	3.32	3.43	3.54
		Amps	6.4	6.6	6.8	7.0	6.9	7.1	7.3	7.6	7.5	7.7	8.0	8.2	8.0	8.2	8.5	8.8	8.5	8.7	9.0	9.4	9.0	9.2	9.5	9.9
		HI PR	238	257	271	283	268	288	304	317	304	328	346	361	347	373	394	411	390	420	443	462	431	464	490	511
		LO PR	109	116	127	135	116	123	134	143	120	128	139	148	126	134	146	156	132	141	153	163	137	145	159	169
85	1050	MBh	32.7	33.4	34.9	37.3	32.0	32.6	34.1	36.4	31.2	31.8	33.3	35.6	30.5	31.0	32.5	34.7	28.9	29.5	30.9	33.0	26.8	27.3	28.6	30.5
		S/T	0.91	0.88	0.79	0.64	0.94	0.91	0.82	0.67	0.97	0.93	0.84	0.68	1.00	0.96	0.87	0.70	1.00	1.00	0.90	0.73	1.00	1.00	0.91	0.74
		ΔT	26	26	24	21	26	26	25	21	26	26	25	21	27	26	25	21	25	26	24	21	23	24	23	20
		kW	2.48	2.53	2.60	2.68	2.66	2.71	2.79	2.88	2.81	2.87	2.96	3.05	2.95	3.01	3.11	3.21	3.07	3.14	3.23	3.34	3.17	3.24	3.34	3.45
		Amps	6.3	6.4	6.6	6.9	6.8	6.9	7.1	7.4	7.3	7.5	7.7	8.0	7.8	8.0	8.3	8.6	8.3	8.5	8.8	9.1	8.8	9.0	9.3	9.6
		HI PR	231	249	263	274	260	279	295	308	295	318	335	350	336	362	382	399	378	407	430	448	418	450	475	495
		LO PR	106	113	123	131	112	119	130	139	116	124	135	144	122	130	142	151	128	136	149	159	133	141	154	164
	1200	MBh	35.5	36.2	37.9	40.4	34.6	35.3	37.0	39.5	33.8	34.5	36.1	38.5	33.0	33.6	35.2	37.6	31.3	31.9	33.5	35.7	29.0	29.6	31.0	33.1
		S/T	0.94	0.91	0.82	0.67	0.98	0.94	0.85	0.69	1.00	0.97	0.87	0.71	1.00	1.00	0.90	0.73	1.00	1.00	0.93	0.76	1.00	1.00	0.94	0.76
		ΔT	26	25	24	21	26	26	24	21	26	26	24	21	25	26	24	21	24	24	24	21	22	23	22	19
		kW	2.54	2.59	2.66	2.74	2.72	2.77	2.86	2.95	2.88	2.94	3.03	3.13	3.02	3.09	3.19	3.29	3.15	3.21	3.32	3.42	3.25	3.32	3.43	3.54
		Amps	6.4	6.6	6.8	7.0	6.9	7.1	7.3	7.6	7.5	7.7	8.0	8.2	8.0	8.2	8.5	8.8	8.5	8.7	9.0	9.4	9.0	9.2	9.5	9.9
		HI PR	238	257	271	283	268	288	304	317	304	328	346	361	347	373	394	411	390	420	443	462	431	464	490	511
		LO PR	109	116	127	135	116	123	134	143	120	128	139	148	126	134	146	156	132	141	153	163	137	145	159	169
	1350	MBh	36.5	37.2	39.0	41.6	35.7	36.4	38.1	40.6	34.8	35.5	37.2	39.7	34.0	34.6	36.3	38.7	32.3	32.9	34.5	36.8	29.9	30.5	31.9	34.1
		S/T	0.99	0.95	0.86	0.70	1.00	0.99	0.89	0.72	1.00	1.00	0.91	0.74	1.00	1.00	0.94	0.77	1.00	1.00	0.98	0.80	1.00	1.00	0.99	0.80
		ΔT	25	24	23	20	24	24	23	20	24	24	23	20	23	24	23	20	22	22	23	20	20	21	21	19
		kW	2.55	2.61	2.68	2.76	2.74	2.80	2.88	2.97	2.90	2.96	3.06	3.15	3.05	3.11	3.21	3.31	3.17	3.24	3.34	3.45	3.28	3.35	3.46	3.57
		Amps	6.5	6.7	6.9	7.1	7.0	7.2	7.4	7.7	7.6	7.8	8.0	8.3	8.1	8.3	8.6	8.9	8.6	8.8	9.1	9.4	9.1	9.3	9.6	10.0
		HI PR	241	259	274	285	270	291	307	320	307	331	349	364	350	377	398	415	394	424	448	467	435	468	495	516
		LO PR	110	117	128	137	117	124	135	144	121	129	141	150	127	135	148	158	133	142	155	165	138	147	160	171

IDB: Entering Indoor Dry Bulb Temperature
High and low pressures are measured at the liquid and suction service valves.

Shaded area is AHRI conditions.

KW=Total system power
Amps = outdoor unit amps (comp.+fan)

			Outdoor Ambient Temperature																							
			65				75				85				95				105				115			
			Entering Indoor Wet Bulb Temperature																							
IDB	Airflow		59	63	67	71	59	63	67	71	59	63	67	71	59	63	67	71	59	63	67	71	59	63	67	71
70	1400	MBh	40.4	41.9	45.9	-	39.5	40.9	44.8	-	38.5	39.9	43.7	-	37.6	38.9	42.7	-	35.7	37.0	40.5	-	33.1	34.3	37.5	-
		S/T	0.71	0.59	0.41	-	0.73	0.61	0.42	-	0.75	0.63	0.44	-	0.78	0.65	0.45	-	0.81	0.67	0.47	-	0.81	0.68	0.47	-
		ΔT	19	16	12	-	19	16	12	-	19	16	13	-	19	17	13	-	19	16	12	-	18	15	12	-
		kW	3.15	3.21	3.30	-	3.37	3.43	3.53	-	3.56	3.63	3.73	-	3.72	3.80	3.91	-	3.87	3.95	4.07	-	3.99	4.07	4.20	-
		Amps	6.9	7.0	7.2	-	7.4	7.5	7.7	-	7.9	8.1	8.3	-	8.4	8.6	8.8	-	8.9	9.1	9.4	-	9.4	9.6	9.9	-
		HI PR	219	235	249	-	245	264	279	-	279	300	317	-	318	342	361	-	358	385	406	-	395	425	449	-
		LO PR	104	111	121	-	110	117	128	-	115	122	133	-	120	128	140	-	126	134	146	-	130	139	151	-
	1600	MBh	43.8	45.4	49.7	-	42.7	44.3	48.5	-	41.7	43.2	47.4	-	40.7	42.2	46.2	-	38.7	40.1	43.9	-	35.8	37.1	40.7	-
		S/T	0.73	0.61	0.43	-	0.76	0.64	0.44	-	0.78	0.65	0.45	-	0.81	0.67	0.47	-	0.84	0.70	0.48	-	0.84	0.70	0.49	-
		ΔT	18	16	12	-	19	16	12	-	19	16	12	-	19	16	12	-	19	16	12	-	17	15	11	-
		kW	3.22	3.28	3.37	-	3.44	3.51	3.61	-	3.64	3.71	3.82	-	3.81	3.89	4.01	-	3.96	4.04	4.16	-	4.09	4.17	4.30	-
		Amps	7.0	7.2	7.4	-	7.5	7.7	7.9	-	8.1	8.3	8.5	-	8.6	8.8	9.1	-	9.1	9.3	9.6	-	9.6	9.8	10.1	-
		HI PR	225	243	256	-	253	272	287	-	288	310	327	-	328	353	372	-	369	397	419	-	407	438	463	-
		LO PR	108	114	125	-	114	121	132	-	118	126	137	-	124	132	144	-	130	138	151	-	134	143	156	-
	1800	MBh	45.1	46.7	51.2	-	44.0	45.6	50.0	-	43.0	44.5	48.8	-	41.9	43.5	47.6	-	39.8	41.3	45.2	-	36.9	38.2	41.9	-
		S/T	0.77	0.64	0.45	-	0.80	0.67	0.46	-	0.82	0.68	0.47	-	0.85	0.71	0.49	-	0.88	0.73	0.51	-	0.88	0.74	0.51	-
		ΔT	18	15	12	-	18	16	12	-	18	16	12	-	18	16	12	-	18	15	12	-	17	14	11	-
		kW	3.24	3.30	3.40	-	3.47	3.53	3.64	-	3.67	3.74	3.85	-	3.84	3.92	4.04	-	3.99	4.07	4.20	-	4.12	4.20	4.33	-
		Amps	7.1	7.2	7.5	-	7.6	7.8	8.0	-	8.2	8.4	8.6	-	8.7	8.9	9.1	-	9.2	9.4	9.7	-	9.7	9.9	10.2	-
		HI PR	228	245	259	-	256	275	290	-	291	313	330	-	331	356	376	-	372	401	423	-	411	443	468	-
		LO PR	109	116	126	-	115	122	133	-	119	127	139	-	125	133	146	-	131	140	152	-	136	144	158	-
75	1400	MBh	41.1	42.3	45.8	49.1	40.1	41.3	44.7	48.0	39.2	40.3	43.7	46.8	38.2	**39.3**	42.6	45.7	36.3	37.4	40.5	43.4	33.6	34.6	37.5	40.2
		S/T	0.81	0.72	0.55	0.35	0.83	0.75	0.56	0.36	0.86	0.77	0.58	0.37	0.88	**0.79**	0.60	0.38	0.92	0.82	0.62	0.40	0.92	0.83	0.63	0.40
		ΔT	22	20	16	11	22	20	17	11	22	20	17	11	22	**20**	17	12	22	20	16	11	20	19	15	11
		kW	3.17	3.23	3.32	3.42	3.39	3.46	3.56	3.66	3.58	3.65	3.76	3.88	3.75	**3.83**	3.94	4.06	3.90	3.98	4.10	4.23	4.02	4.11	4.23	4.36
		Amps	6.9	7.1	7.3	7.5	7.4	7.6	7.8	8.1	8.0	8.2	8.4	8.7	8.5	**8.7**	8.9	9.2	9.0	9.2	9.4	9.8	9.4	9.6	9.9	10.3
		HI PR	221	238	251	262	248	267	282	294	282	303	320	334	321	**346**	365	381	361	389	411	428	399	430	454	473
		LO PR	105	112	122	130	111	118	129	138	116	123	134	143	122	**129**	141	150	127	136	148	158	132	140	153	163
	1600	MBh	44.5	45.8	49.6	53.2	43.5	44.8	48.4	52.0	42.4	43.7	47.3	50.8	41.4	**42.6**	46.1	49.5	39.3	40.5	43.8	47.0	36.4	37.5	40.6	43.6
		S/T	0.84	0.75	0.57	0.36	0.87	0.77	0.59	0.38	0.89	0.79	0.60	0.39	0.92	**0.82**	0.62	0.40	0.95	0.85	0.64	0.41	0.96	0.86	0.65	0.42
		ΔT	21	20	16	11	22	20	16	11	22	20	16	11	22	**20**	16	11	21	20	16	11	20	18	15	10
		kW	3.24	3.30	3.40	3.50	3.47	3.53	3.64	3.75	3.67	3.74	3.85	3.97	3.84	**3.92**	4.04	4.16	3.99	4.07	4.20	4.33	4.12	4.20	4.33	4.47
		Amps	7.1	7.2	7.5	7.7	7.6	7.8	8.0	8.3	8.2	8.4	8.6	8.9	8.7	**8.9**	9.1	9.5	9.2	9.4	9.7	10.0	9.7	9.9	10.2	10.6
		HI PR	228	245	259	270	256	275	290	303	291	313	330	345	331	**356**	376	392	372	401	423	441	412	443	468	488
		LO PR	109	116	126	134	115	122	133	142	119	127	139	148	125	**133**	146	155	131	140	153	162	136	145	158	168
	1800	MBh	45.8	47.2	51.1	54.8	44.8	46.1	49.9	53.6	43.7	45.0	48.7	52.3	42.6	**43.9**	47.5	51.0	40.5	41.7	45.1	48.5	37.5	38.6	41.8	44.9
		S/T	0.88	0.78	0.59	0.38	0.91	0.81	0.61	0.40	0.93	0.83	0.63	0.41	0.96	**0.86**	0.65	0.42	1.00	0.89	0.67	0.43	1.00	0.90	0.68	0.44
		ΔT	21	19	15	11	21	19	16	11	21	19	16	11	21	**19**	16	11	21	19	16	11	19	18	15	10
		kW	3.27	3.33	3.42	3.52	3.49	3.56	3.67	3.78	3.69	3.77	3.88	4.00	3.87	**3.95**	4.07	4.19	4.02	4.10	4.23	4.36	4.15	4.24	4.37	4.51
		Amps	7.2	7.3	7.5	7.8	7.7	7.8	8.1	8.3	8.2	8.4	8.7	9.0	8.8	**8.9**	9.2	9.5	9.3	9.5	9.8	10.1	9.8	10.0	10.3	10.7
		HI PR	230	248	261	273	258	278	293	306	294	316	334	348	334	**360**	380	396	376	405	427	446	416	447	472	493
		LO PR	110	117	127	136	116	123	135	143	120	128	140	149	127	**135**	147	157	133	141	154	164	137	146	159	170

IDB: Entering Indoor Dry Bulb Temperature
High and low pressures are measured at the liquid and suction service valves.

Shaded area is ACCA (TVA) conditions.

KW=Total system power
Amps = outdoor unit amps (comp.+fan)

Expanded Cooling Data — DX13SA0483A*/CA*F4860*6D* (cont.)

			Outdoor Ambient Temperature																							
			65				75				85				95				105				115			
			Entering Indoor Wet Bulb Temperature																							
IDB	Airflow		59	63	67	71	59	63	67	71	59	63	67	71	59	63	67	71	59	63	67	71	59	63	67	71
80	1400	MBh	41.8	42.7	45.6	48.8	40.8	41.7	44.6	47.7	39.9	40.7	43.5	46.5	38.9	39.7	42.5	45.4	36.9	37.8	40.3	43.1	34.2	35.0	37.4	39.9
		S/T	0.88	0.83	0.67	0.50	0.92	0.86	0.70	0.52	0.94	0.88	0.72	0.54	0.97	0.91	0.74	0.55	1.01	0.94	0.77	0.57	1.01	0.95	0.77	0.58
		ΔT	24	23	20	16	25	24	20	16	25	24	20	16	25	24	21	16	24	23	20	16	23	22	19	15
		kW	3.20	3.26	3.35	3.45	3.42	3.48	3.58	3.69	3.61	3.68	3.79	3.91	3.78	3.86	3.97	4.10	3.93	4.01	4.13	4.26	4.05	4.14	4.26	4.40
		Amps	7.0	7.1	7.3	7.6	7.5	7.6	7.9	8.1	8.0	8.2	8.5	8.7	8.5	8.7	9.0	9.3	9.0	9.2	9.5	9.8	9.5	9.7	10.0	10.4
		HI PR	223	240	254	265	250	269	285	297	285	306	324	338	324	349	369	384	365	393	415	433	403	434	458	478
		LO PR	106	113	124	132	112	120	131	139	117	124	136	145	123	131	143	152	129	137	149	159	133	142	155	165
	1600	MBh	45.3	46.3	49.5	52.9	44.2	45.2	48.3	51.6	43.2	44.1	47.2	50.4	42.1	43.1	**46.0**	49.2	40.0	40.9	43.7	46.7	37.1	37.9	40.5	43.3
		S/T	0.92	0.86	0.70	0.52	0.95	0.89	0.72	0.54	0.97	0.91	0.74	0.56	1.00	0.94	**0.77**	0.57	1.00	0.98	0.80	0.60	1.00	0.99	0.80	0.60
		ΔT	24	23	20	16	24	23	20	16	24	23	20	16	24	23	**20**	16	23	23	20	16	21	21	19	15
		kW	3.27	3.33	3.42	3.52	3.49	3.56	3.67	3.78	3.69	3.77	3.88	4.00	3.87	3.95	**4.07**	4.20	4.02	4.10	4.23	4.36	4.15	4.24	4.37	4.51
		Amps	7.2	7.3	7.5	7.8	7.7	7.8	8.1	8.3	8.2	8.4	8.7	9.0	8.8	8.9	**9.2**	9.5	9.3	9.5	9.8	10.1	9.8	10.0	10.3	10.7
		HI PR	230	248	261	273	258	278	293	306	294	316	334	348	334	360	**380**	396	376	405	428	446	416	447	472	493
		LO PR	110	117	127	136	116	123	135	143	120	128	140	149	127	135	**147**	157	133	141	154	164	137	146	159	170
	1800	MBh	46.7	47.7	50.9	54.4	45.6	46.6	49.7	53.2	44.5	45.5	48.6	51.9	43.4	44.3	47.4	50.6	41.2	42.1	45.0	48.1	38.2	39.0	41.7	44.6
		S/T	0.96	0.90	0.73	0.55	1.00	0.93	0.76	0.57	1.00	0.96	0.78	0.58	1.00	1.00	0.80	0.60	1.00	1.00	0.83	0.62	1.00	1.00	0.84	0.63
		ΔT	23	22	19	15	23	22	19	15	23	22	19	15	22	23	19	16	21	22	19	15	20	20	18	14
		kW	3.29	3.35	3.45	3.55	3.52	3.59	3.69	3.80	3.72	3.80	3.91	4.03	3.90	3.98	4.10	4.23	4.05	4.14	4.26	4.40	4.18	4.27	4.40	4.54
		Amps	7.2	7.4	7.6	7.8	7.7	7.9	8.1	8.4	8.3	8.5	8.8	9.0	8.8	9.0	9.3	9.6	9.3	9.6	9.8	10.2	9.8	10.1	10.4	10.7
		HI PR	232	250	264	275	261	281	296	309	297	319	337	351	338	363	384	400	380	409	432	450	420	452	477	498
		LO PR	111	118	129	137	117	125	136	145	122	129	141	151	128	136	148	158	134	143	156	166	139	147	161	171
85	1400	MBh	42.5	43.4	45.4	48.5	41.5	42.4	44.4	47.3	40.6	41.3	43.3	46.2	39.6	40.3	42.2	45.1	37.6	38.3	40.1	42.8	34.8	35.5	37.2	39.7
		S/T	0.93	0.89	0.81	0.65	0.96	0.93	0.84	0.68	0.98	0.95	0.86	0.70	1.00	0.98	0.88	0.72	1.00	1.00	0.92	0.74	1.00	1.00	0.93	0.75
		ΔT	26	25	24	21	26	26	24	21	26	26	24	21	26	26	25	21	25	25	24	21	23	23	23	20
		kW	3.22	3.28	3.37	3.47	3.44	3.51	3.61	3.72	3.64	3.71	3.82	3.94	3.81	3.89	4.01	4.13	3.96	4.04	4.16	4.29	4.09	4.17	4.30	4.43
		Amps	7.0	7.2	7.4	7.6	7.5	7.7	7.9	8.2	8.1	8.3	8.5	8.8	8.6	8.8	9.1	9.4	9.1	9.3	9.6	9.9	9.6	9.8	10.1	10.5
		HI PR	225	243	256	267	253	272	287	300	288	310	327	341	328	353	372	388	369	397	419	437	407	438	463	483
		LO PR	108	114	125	133	114	121	132	140	118	126	137	146	124	132	144	153	130	138	151	161	134	143	156	166
	1600	MBh	46.1	47.0	49.2	52.5	45.0	45.9	48.1	51.3	43.9	44.8	46.9	50.1	42.9	43.7	45.8	48.8	40.7	41.5	43.5	46.4	37.7	38.5	40.3	43.0
		S/T	0.96	0.93	0.84	0.68	1.00	0.96	0.87	0.70	1.00	0.98	0.89	0.72	1.00	1.00	0.92	0.74	1.00	1.00	0.95	0.77	1.00	1.00	0.96	0.78
		ΔT	25	25	24	20	26	25	24	21	25	25	24	21	25	25	24	21	23	24	24	21	22	22	22	19
		kW	3.29	3.35	3.45	3.55	3.52	3.59	3.69	3.80	3.72	3.80	3.91	4.03	3.90	3.98	4.10	4.23	4.05	4.14	4.26	4.40	4.18	4.27	4.40	4.54
		Amps	7.2	7.4	7.6	7.8	7.7	7.9	8.1	8.4	8.3	8.5	8.8	9.0	8.8	9.0	9.3	9.6	9.3	9.6	9.8	10.2	9.8	10.1	10.4	10.7
		HI PR	232	250	264	275	261	281	296	309	297	319	337	351	338	363	384	400	380	409	432	450	420	452	477	498
		LO PR	111	118	129	137	117	125	136	145	122	129	141	151	128	136	148	158	134	143	156	166	139	147	161	171
	1800	MBh	47.5	48.4	50.7	54.1	46.4	47.3	49.5	52.8	45.3	46.1	48.3	51.6	44.2	45.0	47.1	50.3	42.0	42.8	44.8	47.8	38.9	39.6	41.5	44.3
		S/T	1.00	0.97	0.88	0.71	1.00	1.00	0.91	0.74	1.00	1.00	0.93	0.76	1.00	1.00	0.96	0.78	1.00	1.00	1.00	0.81	1.00	1.00	1.00	0.82
		ΔT	24	24	23	20	24	24	23	20	23	24	23	20	23	23	23	20	21	22	23	20	20	20	21	18
		kW	3.31	3.38	3.47	3.58	3.54	3.61	3.72	3.83	3.75	3.82	3.94	4.06	3.93	4.01	4.13	4.26	4.08	4.17	4.30	4.43	4.22	4.30	4.44	4.58
		Amps	7.3	7.4	7.6	7.9	7.8	8.0	8.2	8.5	8.4	8.6	8.8	9.1	8.9	9.1	9.4	9.7	9.4	9.6	9.9	10.3	9.9	10.2	10.5	10.8
		HI PR	235	253	267	278	263	283	299	312	300	322	340	355	341	367	388	404	384	413	436	455	424	456	482	503
		LO PR	112	119	130	138	118	126	137	146	123	131	143	152	129	137	150	160	135	144	157	167	140	149	163	173

IDB: Entering Indoor Dry Bulb Temperature
High and low pressures are measured at the liquid and suction service valves.

Shaded area is AHRI conditions.

KW=Total system power
Amps = outdoor unit amps (comp.+fan)

Expanded Cooling Data — DX13SA0484A* / CA*F4860*6D*

			Outdoor Ambient Temperature																							
			65				75				85				95				105				115			
			Entering Indoor Wet Bulb Temperature																							
IDB	Airflow		59	63	67	71	59	63	67	71	59	63	67	71	59	63	67	71	59	63	67	71	59	63	67	71
70	1400	MBh	40.4	41.9	45.9	-	39.5	40.9	44.8	-	38.5	39.9	43.7	-	37.6	38.9	42.7	-	35.7	37.0	40.5	-	33.1	34.3	37.5	-
		S/T	0.71	0.59	0.41	-	0.73	0.61	0.42	-	0.75	0.63	0.44	-	0.78	0.65	0.45	-	0.81	0.67	0.47	-	0.81	0.68	0.47	-
		ΔT	19	16	12	-	19	16	12	-	19	16	13	-	19	17	13	-	19	16	12	-	18	15	12	-
		kW	3.15	3.21	3.30	-	3.36	3.43	3.53	-	3.56	3.63	3.73	-	3.72	3.80	3.91	-	3.87	3.95	4.07	-	3.99	4.07	4.20	-
		Amps	3.7	3.8	3.9	-	4.0	4.1	4.2	-	4.3	4.4	4.5	-	4.6	4.7	4.8	-	4.8	4.9	5.1	-	5.1	5.2	5.4	-
		HI PR	219	235	249	-	245	264	279	-	279	300	317	-	318	342	361	-	358	385	406	-	395	425	449	-
		LO PR	104	111	121	-	110	117	128	-	115	122	133	-	120	128	140	-	126	134	146	-	130	139	151	-
	1600	MBh	43.8	45.4	49.7	-	42.7	44.3	48.5	-	41.7	43.2	47.4	-	40.7	42.2	46.2	-	38.7	40.1	43.9	-	35.8	37.1	40.7	-
		S/T	0.73	0.61	0.43	-	0.76	0.64	0.44	-	0.78	0.65	0.45	-	0.81	0.67	0.47	-	0.84	0.70	0.48	-	0.84	0.70	0.49	-
		ΔT	18	16	12	-	19	16	12	-	19	16	12	-	19	16	12	-	19	16	12	-	17	15	11	-
		kW	3.22	3.28	3.37	-	3.44	3.51	3.61	-	3.64	3.71	3.82	-	3.81	3.89	4.01	-	3.96	4.04	4.16	-	4.09	4.17	4.30	-
		Amps	3.8	3.9	4.0	-	4.1	4.2	4.3	-	4.4	4.5	4.6	-	4.7	4.8	4.9	-	4.9	5.1	5.2	-	5.2	5.3	5.5	-
		HI PR	225	243	256	-	253	272	287	-	288	310	327	-	328	353	372	-	369	397	419	-	407	438	463	-
		LO PR	108	114	125	-	114	121	132	-	118	126	137	-	124	132	144	-	130	138	151	-	134	143	156	-
	1800	MBh	45.1	46.7	51.2	-	44.0	45.6	50.0	-	43.0	44.5	48.8	-	41.9	43.5	47.6	-	39.8	41.3	45.2	-	36.9	38.2	41.9	-
		S/T	0.77	0.64	0.45	-	0.80	0.67	0.46	-	0.82	0.68	0.47	-	0.85	0.71	0.49	-	0.88	0.73	0.51	-	0.88	0.74	0.51	-
		ΔT	18	15	12	-	18	16	12	-	18	16	12	-	18	16	12	-	18	15	12	-	17	14	11	-
		kW	3.24	3.30	3.40	-	3.47	3.53	3.64	-	3.66	3.74	3.85	-	3.84	3.92	4.04	-	3.99	4.07	4.20	-	4.12	4.20	4.33	-
		Amps	3.9	3.9	4.0	-	4.1	4.2	4.3	-	4.4	4.5	4.7	-	4.7	4.8	5.0	-	5.0	5.1	5.3	-	5.3	5.4	5.5	-
		HI PR	228	245	259	-	256	275	290	-	291	313	330	-	331	356	376	-	372	401	423	-	411	443	468	-
		LO PR	109	116	126	-	115	122	133	-	119	127	139	-	125	133	146	-	131	140	152	-	136	144	158	-
75	1400	MBh	41.1	42.3	45.8	49.1	40.1	41.3	44.7	48.0	39.2	40.3	43.7	46.8	38.2	**39.3**	42.6	45.7	36.3	37.4	40.5	43.4	33.6	34.6	37.5	40.2
		S/T	0.81	0.72	0.55	0.35	0.83	0.75	0.56	0.36	0.86	0.77	0.58	0.37	0.88	**0.79**	0.60	0.38	0.92	0.82	0.62	0.40	0.92	0.83	0.63	0.40
		ΔT	22	20	16	11	22	20	17	11	22	20	17	11	22	**20**	17	12	22	20	16	11	20	19	15	11
		kW	3.17	3.23	3.32	3.42	3.39	3.46	3.56	3.66	3.58	3.65	3.76	3.88	3.75	**3.83**	3.94	4.06	3.90	3.98	4.10	4.23	4.02	4.11	4.23	4.36
		Amps	3.8	3.8	3.9	4.1	4.0	4.1	4.2	4.4	4.3	4.4	4.6	4.7	4.6	**4.7**	4.8	5.0	4.9	5.0	5.1	5.3	5.1	5.2	5.4	5.6
		HI PR	221	238	251	262	248	267	282	294	282	303	320	334	321	**346**	365	381	361	389	411	428	399	430	454	473
		LO PR	105	112	122	130	111	118	129	138	116	123	134	143	122	**129**	141	150	127	136	148	158	132	140	153	163
	1600	MBh	44.5	45.8	49.6	53.2	43.5	44.8	48.4	52.0	42.4	43.7	47.3	50.8	41.4	**42.6**	46.1	49.5	39.3	40.5	43.8	47.0	36.4	37.5	40.6	43.6
		S/T	0.84	0.75	0.57	0.36	0.87	0.77	0.59	0.38	0.89	0.79	0.60	0.39	0.92	**0.82**	0.62	0.40	0.95	0.85	0.64	0.41	0.96	0.86	0.65	0.42
		ΔT	21	20	16	11	22	20	16	11	22	20	16	11	22	**20**	16	11	21	20	16	11	20	18	15	10
		kW	3.24	3.30	3.40	3.50	3.47	3.53	3.64	3.75	3.67	3.74	3.85	3.97	3.84	**3.92**	4.04	4.16	3.99	4.07	4.20	4.33	4.12	4.20	4.33	4.47
		Amps	3.9	3.9	4.0	4.2	4.1	4.2	4.3	4.5	4.4	4.5	4.7	4.8	4.7	**4.8**	5.0	5.1	5.0	5.1	5.3	5.4	5.3	5.4	5.5	5.7
		HI PR	228	245	259	270	256	275	290	303	291	313	330	345	331	**356**	376	392	372	401	423	441	412	443	468	488
		LO PR	109	116	126	134	115	122	133	142	119	127	139	148	125	**133**	146	155	131	140	153	162	136	145	158	168
	1800	MBh	45.8	47.2	51.1	54.8	44.8	46.1	49.9	53.6	43.7	45.0	48.7	52.3	42.6	**43.9**	47.5	51.0	40.5	41.7	45.1	48.5	37.5	38.6	41.8	44.9
		S/T	0.88	0.78	0.59	0.38	0.91	0.81	0.61	0.40	0.93	0.83	0.63	0.41	0.96	**0.86**	0.65	0.42	1.00	0.89	0.67	0.43	1.00	0.90	0.68	0.44
		ΔT	21	19	15	11	21	19	16	11	21	19	16	11	21	**19**	16	11	21	19	16	11	19	18	15	10
		kW	3.26	3.33	3.42	3.52	3.49	3.56	3.66	3.77	3.69	3.77	3.88	4.00	3.87	**3.95**	4.07	4.19	4.02	4.10	4.23	4.36	4.15	4.24	4.37	4.51
		Amps	3.9	4.0	4.1	4.2	4.2	4.2	4.4	4.5	4.5	4.6	4.7	4.9	4.8	**4.9**	5.0	5.2	5.0	5.1	5.3	5.5	5.3	5.4	5.6	5.8
		HI PR	230	248	261	273	258	278	293	306	294	316	334	348	334	**360**	380	396	376	405	427	446	416	447	472	493
		LO PR	110	117	127	136	116	123	135	143	120	128	140	149	127	**135**	147	157	133	141	154	164	137	146	159	170

IDB: Entering Indoor Dry Bulb Temperature
High and low pressures are measured at the liquid and suction service valves.

Shaded area is ACCA (TVA) conditions.

KW=Total system power
Amps = outdoor unit amps (comp.+fan)

Expanded Cooling Data — DX13SA0484A*/CA*F4860*6D* (cont.)

			Outdoor Ambient Temperature																							
			65				75				85				95				105				115			
			Entering Indoor Wet Bulb Temperature																							
IDB	Airflow		59	63	67	71	59	63	67	71	59	63	67	71	59	63	67	71	59	63	67	71	59	63	67	71
80	1400	MBh	41.8	42.7	45.6	48.8	40.8	41.7	44.6	47.7	39.9	40.7	43.5	46.5	38.9	39.7	42.5	45.4	36.9	37.8	40.3	43.1	34.2	35.0	37.4	39.9
		S/T	0.88	0.83	0.67	0.50	0.92	0.86	0.70	0.52	0.94	0.88	0.72	0.54	0.97	0.91	0.74	0.55	1.01	0.94	0.77	0.57	1.01	0.95	0.77	0.58
		ΔT	24	23	20	16	25	24	20	16	25	24	20	16	25	24	21	16	24	23	20	16	23	22	19	15
		kW	3.19	3.25	3.35	3.44	3.41	3.48	3.58	3.69	3.61	3.68	3.79	3.91	3.78	3.86	3.97	4.10	3.93	4.01	4.13	4.26	4.05	4.14	4.27	4.40
		Amps	3.8	3.9	4.0	4.1	4.1	4.1	4.3	4.4	4.4	4.5	4.6	4.8	4.6	4.7	4.9	5.1	4.9	5.0	5.2	5.3	5.2	5.3	5.5	5.6
		HI PR	223	240	254	265	250	269	285	297	285	306	324	338	324	349	369	384	365	393	415	433	403	434	458	478
		LO PR	106	113	124	132	112	120	131	139	117	124	136	145	123	131	143	152	129	137	149	159	133	142	155	165
	1600	MBh	45.3	46.3	49.5	52.9	44.2	45.2	48.3	51.6	43.2	44.1	47.2	50.4	42.1	43.1	**46.0**	49.2	40.0	40.9	43.7	46.7	37.1	37.9	40.5	43.3
		S/T	0.92	0.86	0.70	0.52	0.95	0.89	0.72	0.54	0.97	0.91	0.74	0.56	1.00	0.94	**0.77**	0.57	1.00	0.98	0.80	0.60	1.00	0.99	0.80	0.60
		ΔT	24	23	20	16	24	23	20	16	24	23	20	16	24	23	**20**	16	23	23	20	16	21	21	19	15
		kW	3.26	3.33	3.42	3.52	3.49	3.56	3.67	3.78	3.69	3.77	3.88	4.00	3.87	3.95	**4.07**	4.20	4.02	4.10	4.23	4.36	4.15	4.24	4.37	4.51
		Amps	3.9	4.0	4.1	4.2	4.2	4.2	4.4	4.5	4.5	4.6	4.7	4.9	4.8	4.9	**5.0**	5.2	5.0	5.1	5.3	5.5	5.3	5.4	5.6	5.8
		HI PR	230	248	261	273	258	278	293	306	294	316	334	348	334	360	**380**	396	376	405	428	446	416	447	472	493
		LO PR	110	117	127	136	116	123	135	143	120	128	140	149	127	135	**147**	157	133	141	154	164	137	146	159	170
	1800	MBh	46.7	47.7	50.9	54.4	45.6	46.6	49.7	53.2	44.5	45.5	48.6	51.9	43.4	44.3	47.4	50.6	41.2	42.1	45.0	48.1	38.2	39.0	41.7	44.6
		S/T	0.96	0.90	0.73	0.55	1.00	0.93	0.76	0.57	1.00	0.96	0.78	0.58	1.00	1.00	0.80	0.60	1.00	1.00	0.83	0.62	1.00	1.00	0.84	0.63
		ΔT	23	22	19	15	23	22	19	15	23	22	19	15	22	23	19	16	21	22	19	15	20	20	18	14
		kW	3.29	3.35	3.45	3.55	3.52	3.59	3.69	3.80	3.72	3.80	3.91	4.03	3.90	3.98	4.10	4.23	4.05	4.14	4.26	4.40	4.18	4.27	4.40	4.54
		Amps	3.9	4.0	4.1	4.2	4.2	4.3	4.4	4.6	4.5	4.6	4.8	4.9	4.8	4.9	5.1	5.2	5.1	5.2	5.3	5.5	5.4	5.5	5.6	5.8
		HI PR	232	250	264	275	261	281	296	309	297	319	337	351	338	363	384	400	380	409	432	450	420	452	477	498
		LO PR	111	118	129	137	117	125	136	145	122	129	141	151	128	136	148	158	134	143	156	166	139	147	161	171
85	1400	MBh	42.5	43.4	45.4	48.5	41.5	42.4	44.4	47.3	40.6	41.3	43.3	46.2	39.6	40.3	42.2	45.1	37.6	38.3	40.1	42.8	34.8	35.5	37.2	39.7
		S/T	0.93	0.89	0.81	0.65	0.96	0.93	0.84	0.68	0.98	0.95	0.86	0.70	1.00	0.98	0.88	0.72	1.00	1.00	0.92	0.74	1.00	1.00	0.93	0.75
		ΔT	26	25	24	21	26	26	24	21	26	26	24	21	26	26	25	21	25	25	24	21	23	23	23	20
		kW	3.22	3.28	3.37	3.47	3.44	3.51	3.61	3.72	3.64	3.71	3.82	3.94	3.81	3.89	4.00	4.13	3.96	4.04	4.16	4.29	4.09	4.17	4.30	4.43
		Amps	3.8	3.9	4.0	4.1	4.1	4.2	4.3	4.4	4.4	4.5	4.6	4.8	4.7	4.8	4.9	5.1	4.9	5.1	5.2	5.4	5.2	5.3	5.5	5.7
		HI PR	225	243	256	267	253	272	287	300	288	310	327	341	328	353	372	388	369	397	419	437	407	438	463	483
		LO PR	108	114	125	133	114	121	132	140	118	126	137	146	124	132	144	153	130	138	151	161	134	143	156	166
	1600	MBh	46.1	47.0	49.2	52.5	45.0	45.9	48.1	51.3	43.9	44.8	46.9	50.1	42.9	43.7	45.8	48.8	40.7	41.5	43.5	46.4	37.7	38.5	40.3	43.0
		S/T	0.96	0.93	0.84	0.68	1.00	0.96	0.87	0.70	1.00	0.98	0.89	0.72	1.00	1.00	0.92	0.74	1.00	1.00	0.95	0.77	1.00	1.00	0.96	0.78
		ΔT	25	25	24	20	26	25	24	21	25	25	24	21	25	25	24	21	23	24	24	21	22	22	22	19
		kW	3.29	3.35	3.45	3.55	3.52	3.59	3.69	3.80	3.72	3.80	3.91	4.03	3.90	3.98	4.10	4.23	4.05	4.14	4.26	4.40	4.18	4.27	4.40	4.54
		Amps	3.9	4.0	4.1	4.2	4.2	4.3	4.4	4.6	4.5	4.6	4.8	4.9	4.8	4.9	5.1	5.2	5.1	5.2	5.3	5.5	5.4	5.5	5.6	5.8
		HI PR	232	250	264	275	261	281	296	309	297	319	337	351	338	363	384	400	380	409	432	450	420	452	477	498
		LO PR	111	118	129	137	117	125	136	145	122	129	141	151	128	136	148	158	134	143	156	166	139	147	161	171
	1800	MBh	47.5	48.4	50.7	54.1	46.4	47.3	49.5	52.8	45.3	46.1	48.3	51.6	44.2	45.0	47.1	50.3	42.0	42.8	44.8	47.8	38.9	39.6	41.5	44.3
		S/T	1.00	0.97	0.88	0.71	1.00	1.00	0.91	0.74	1.00	1.00	0.93	0.76	1.00	1.00	0.96	0.78	1.00	1.00	1.00	0.81	1.00	1.00	1.00	0.82
		ΔT	24	24	23	20	24	24	23	20	23	24	23	20	23	23	23	20	21	22	23	20	20	20	21	18
		kW	3.31	3.38	3.47	3.57	3.54	3.61	3.72	3.83	3.75	3.82	3.94	4.06	3.93	4.01	4.13	4.26	4.08	4.17	4.30	4.43	4.22	4.30	4.44	4.58
		Amps	3.9	4.0	4.1	4.3	4.2	4.3	4.4	4.6	4.6	4.7	4.8	5.0	4.8	4.9	5.1	5.3	5.1	5.2	5.4	5.6	5.4	5.5	5.7	5.9
		HI PR	235	253	267	278	263	283	299	312	300	322	340	355	341	367	388	404	384	413	436	455	424	456	482	503
		LO PR	112	119	130	138	118	126	137	146	123	131	143	152	129	137	150	160	135	144	157	167	140	149	163	173

IDB: Entering Indoor Dry Bulb Temperature
High and low pressures are measured at the liquid and suction service valves.

Shaded area is AHRI conditions.

KW=Total system power
Amps = outdoor unit amps (comp.+fan)

Expanded Cooling Data — DX13SA0603**/CA*F4961*6D*+EEP

			Outdoor Ambient Temperature																							
			65				75				85				95				105				115			
			Entering Indoor Wet Bulb Temperature																							
IDB	Airflow		59	63	67	71	59	63	67	71	59	63	67	71	59	63	67	71	59	63	67	71	59	63	67	71
70	1500	MBh	53.8	55.7	61.0	-	52.5	54.4	59.6	-	51.3	53.1	58.2	-	50.0	51.8	56.8	-	47.5	49.2	53.9	-	44.0	45.6	50.0	-
		S/T	0.66	0.55	0.38	-	0.68	0.57	0.39	-	0.70	0.58	0.40	-	0.72	0.60	0.42	-	0.75	0.62	0.43	-	0.75	0.63	0.44	-
		ΔT	22	19	14	-	22	19	14	-	22	19	14	-	22	19	14	-	22	19	14	-	20	18	13	-
		kW	3.97	4.05	4.18	-	4.27	4.37	4.51	-	4.54	4.64	4.80	-	4.78	4.89	5.05	-	4.99	5.10	5.27	-	5.16	5.28	5.45	-
		Amps	15.4	15.8	16.3	-	16.7	17.1	17.6	-	18.1	18.6	19.2	-	19.4	19.9	20.6	-	20.7	21.2	21.9	-	22.0	22.5	23.3	-
		HI PR	228	245	259	-	256	275	291	-	291	313	331	-	331	357	377	-	373	401	424	-	412	443	468	-
		LO PR	98	104	114	-	103	110	120	-	107	114	125	-	113	120	131	-	118	126	137	-	122	130	142	-
	1750	MBh	55.4	57.4	62.9	-	54.1	56.1	61.4	-	52.8	54.7	59.9	-	51.5	53.4	58.5	-	48.9	50.7	55.6	-	45.3	47.0	51.5	-
		S/T	0.69	0.57	0.40	-	0.71	0.60	0.41	-	0.73	0.61	0.42	-	0.75	0.63	0.44	-	0.78	0.65	0.45	-	0.79	0.66	0.46	-
		ΔT	20	17	13	-	20	18	13	-	20	18	13	-	20	18	13	-	20	17	13	-	19	16	12	-
		kW	4.00	4.09	4.21	-	4.31	4.40	4.54	-	4.58	4.68	4.84	-	4.82	4.93	5.09	-	5.03	5.14	5.31	-	5.20	5.32	5.50	-
		Amps	15.5	15.9	16.4	-	16.8	17.2	17.8	-	18.3	18.8	19.4	-	19.6	20.1	20.8	-	20.9	21.4	22.2	-	22.2	22.7	23.5	-
		HI PR	230	248	262	-	258	278	294	-	294	316	334	-	335	360	380	-	377	405	428	-	416	448	473	-
		LO PR	99	105	115	-	104	111	121	-	108	115	126	-	114	121	132	-	119	127	139	-	124	131	143	-
	2000	MBh	55.6	57.7	63.2	-	54.3	56.3	61.7	-	53.0	55.0	60.2	-	51.8	53.6	58.8	-	49.2	51.0	55.8	-	45.5	47.2	51.7	-
		S/T	0.70	0.58	0.40	-	0.72	0.60	0.42	-	0.74	0.62	0.43	-	0.77	0.64	0.44	-	0.79	0.66	0.46	-	0.80	0.67	0.46	-
		ΔT	18	15	12	-	18	16	12	-	18	16	12	-	18	16	12	-	18	16	12	-	17	15	11	-
		kW	4.03	4.12	4.25	-	4.34	4.44	4.58	-	4.62	4.72	4.88	-	4.86	4.97	5.13	-	5.07	5.18	5.36	-	5.25	5.37	5.55	-
		Amps	15.7	16.0	16.6	-	17.0	17.4	18.0	-	18.5	18.9	19.6	-	19.8	20.3	21.0	-	21.1	21.6	22.4	-	22.4	22.9	23.7	-
		HI PR	233	250	264	-	261	281	297	-	297	319	337	-	338	364	384	-	380	409	432	-	420	452	477	-
		LO PR	100	106	116	-	105	112	122	-	110	117	127	-	115	122	134	-	121	128	140	-	125	133	145	-
75	1500	MBh	54.7	56.3	60.9	65.4	53.4	55.0	59.5	63.9	52.1	53.7	58.1	62.3	50.9	**52.4**	56.7	60.8	48.3	49.7	53.8	57.8	44.7	46.1	49.9	53.5
		S/T	0.75	0.67	0.50	0.32	0.77	0.69	0.52	0.34	0.79	0.71	0.54	0.35	0.82	**0.73**	0.55	0.36	0.85	0.76	0.57	0.37	0.86	0.77	0.58	0.37
		ΔT	25	23	19	13	25	23	19	13	25	23	19	13	26	**23**	19	13	25	23	19	13	23	22	18	12
		kW	4.00	4.09	4.22	4.35	4.31	4.40	4.55	4.69	4.58	4.68	4.84	5.00	4.82	**4.93**	5.09	5.26	5.03	5.14	5.31	5.49	5.20	5.32	5.50	5.69
		Amps	15.5	15.9	16.4	17.1	16.8	17.2	17.8	18.5	18.3	18.8	19.4	20.2	19.6	**20.1**	20.8	21.6	20.9	21.4	22.2	23.0	22.2	22.7	23.5	24.4
		HI PR	230	248	262	273	258	278	294	306	294	316	334	348	335	**360**	380	397	377	405	428	446	416	448	473	493
		LO PR	99	105	115	122	104	111	121	129	108	115	126	134	114	**121**	132	141	119	127	139	148	124	131	143	153
	1750	MBh	56.3	58.0	62.7	67.3	55.0	56.6	61.3	65.8	53.7	55.3	59.8	64.2	52.4	**53.9**	58.4	62.6	49.8	51.2	55.5	59.5	46.1	47.5	51.4	55.1
		S/T	0.78	0.70	0.53	0.34	0.81	0.72	0.55	0.35	0.83	0.74	0.56	0.36	0.86	**0.77**	0.58	0.37	0.89	0.80	0.60	0.39	0.90	0.80	0.61	0.39
		ΔT	23	21	17	12	23	22	18	12	23	22	18	12	24	**22**	18	12	23	21	18	12	22	20	16	11
		kW	4.03	4.12	4.25	4.39	4.34	4.44	4.58	4.73	4.62	4.72	4.88	5.04	4.86	**4.97**	5.14	5.31	5.07	5.18	5.36	5.54	5.25	5.37	5.55	5.74
		Amps	15.7	16.1	16.6	17.2	17.0	17.4	18.0	18.7	18.5	18.9	19.6	20.3	19.8	**20.3**	21.0	21.8	21.1	21.6	22.4	23.2	22.4	22.9	23.7	24.7
		HI PR	233	250	264	276	261	281	297	309	297	320	337	352	338	**364**	384	401	380	409	432	451	420	452	478	498
		LO PR	100	106	116	123	105	112	122	130	110	117	127	136	115	**122**	134	142	121	128	140	149	125	133	145	154
	2000	MBh	56.6	58.3	63.1	67.7	55.3	56.9	61.6	66.1	53.9	55.5	60.1	64.5	52.6	**54.2**	58.7	63.0	50.0	51.5	55.7	59.8	46.3	47.7	51.6	55.4
		S/T	0.79	0.71	0.54	0.35	0.82	0.73	0.56	0.36	0.84	0.75	0.57	0.37	0.87	**0.78**	0.59	0.38	0.90	0.81	0.61	0.39	0.91	0.81	0.62	0.40
		ΔT	21	19	16	11	21	19	16	11	21	19	16	11	21	**19**	16	11	21	19	16	11	19	18	15	10
		kW	4.06	4.15	4.28	4.42	4.38	4.48	4.62	4.77	4.66	4.76	4.92	5.08	4.90	**5.01**	5.18	5.35	5.11	5.23	5.40	5.59	5.29	5.41	5.59	5.78
		Amps	15.8	16.2	16.7	17.4	17.1	17.6	18.1	18.8	18.7	19.1	19.8	20.5	20.0	**20.5**	21.2	22.0	21.3	21.8	22.6	23.5	22.6	23.2	24.0	24.9
		HI PR	235	253	267	278	264	284	300	312	300	323	341	355	341	**367**	388	405	384	413	437	455	424	457	482	503
		LO PR	101	107	117	125	106	113	124	132	111	118	129	137	116	**124**	135	144	122	130	141	151	126	134	146	156

IDB: Entering Indoor Dry Bulb Temperature
High and low pressures are measured at the liquid and suction service valves.

Shaded area is ACCA (TVA) conditions.

KW=Total system power
Amps = outdoor unit amps (comp.+fan)

Expanded Cooling Data — DX13SA0603**/CA*F4961*6D*+EEP (cont.)

			Outdoor Ambient Temperature																							
			65				75				85				95				105				115			
			Entering Indoor Wet Bulb Temperature																							
IDB	Airflow		59	63	67	71	59	63	67	71	59	63	67	71	59	63	67	71	59	63	67	71	59	63	67	71
80	1500	MBh	55.6	56.9	60.7	64.9	54.3	55.5	59.3	63.4	53.0	54.2	57.9	61.9	51.8	52.9	**56.5**	60.4	49.2	50.2	53.7	57.4	45.5	46.5	49.7	53.2
		S/T	0.82	0.77	0.62	0.47	0.85	0.80	0.65	0.48	0.87	0.82	0.66	0.50	0.90	0.84	**0.69**	0.51	0.93	0.87	0.71	0.53	0.94	0.88	0.72	0.54
		ΔT	28	27	23	19	28	27	24	19	28	27	24	19	28	27	**24**	19	28	27	23	19	26	25	22	17
		kW	4.03	4.12	4.25	4.39	4.35	4.44	4.58	4.73	4.62	4.72	4.88	5.04	4.86	4.97	**5.14**	5.31	5.07	5.18	5.36	5.54	5.25	5.37	5.55	5.74
		Amps	15.7	16.1	16.6	17.2	17.0	17.4	18.0	18.7	18.5	18.9	19.6	20.3	19.8	20.3	**21.0**	21.8	21.1	21.6	22.4	23.2	22.4	22.9	23.7	24.7
		HI PR	233	250	264	276	261	281	297	309	297	320	337	352	338	364	**384**	401	380	409	432	451	420	452	478	498
		LO PR	100	106	116	123	105	112	122	130	110	117	127	136	115	122	**134**	142	121	128	140	149	125	133	145	154
	1750	MBh	57.3	58.6	62.6	66.9	56.0	57.2	61.1	65.3	54.6	55.8	59.6	63.8	53.3	54.5	58.2	62.2	50.6	51.7	55.3	59.1	46.9	47.9	51.2	54.7
		S/T	0.86	0.80	0.65	0.49	0.89	0.83	0.68	0.51	0.91	0.85	0.70	0.52	0.94	0.88	0.72	0.54	1.00	0.92	0.75	0.56	1.00	0.92	0.75	0.56
		ΔT	26	25	22	17	26	25	22	17	26	25	22	17	26	25	22	18	27	25	22	17	25	23	20	16
		kW	4.07	4.15	4.28	4.42	4.38	4.48	4.62	4.77	4.66	4.76	4.92	5.08	4.90	5.01	5.18	5.35	5.11	5.23	5.40	5.59	5.29	5.41	5.59	5.79
		Amps	15.8	16.2	16.7	17.4	17.1	17.6	18.2	18.9	18.7	19.1	19.8	20.5	20.0	20.5	21.2	22.0	21.3	21.8	22.6	23.5	22.6	23.2	24.0	24.9
		HI PR	235	253	267	279	264	284	300	313	300	323	341	355	342	368	388	405	384	414	437	455	425	457	482	503
		LO PR	101	107	117	125	107	113	124	132	111	118	129	137	116	124	135	144	122	130	142	151	126	134	146	156
	2000	MBh	57.6	58.8	62.9	67.2	56.2	57.5	61.4	65.6	54.9	56.1	59.9	64.1	53.6	54.7	58.5	62.5	50.9	52.0	55.6	59.4	47.1	48.2	51.5	55.0
		S/T	0.87	0.82	0.66	0.50	0.90	0.85	0.69	0.51	0.92	0.87	0.71	0.53	0.95	0.89	0.73	0.54	1.00	0.93	0.76	0.56	1.00	0.94	0.76	0.57
		ΔT	23	22	19	15	23	22	19	16	23	22	19	16	23	23	20	16	23	22	19	15	22	21	18	14
		kW	4.10	4.19	4.32	4.46	4.42	4.51	4.66	4.81	4.70	4.80	4.96	5.12	4.94	5.06	5.22	5.40	5.16	5.27	5.45	5.63	5.34	5.46	5.64	5.84
		Amps	16.0	16.4	16.9	17.6	17.3	17.7	18.3	19.0	18.8	19.3	20.0	20.7	20.2	20.7	21.4	22.2	21.5	22.0	22.8	23.7	22.8	23.4	24.2	25.1
		HI PR	237	255	270	281	266	287	303	316	303	326	344	359	345	371	392	409	388	418	441	460	429	461	487	508
		LO PR	102	108	118	126	108	114	125	133	112	119	130	138	117	125	136	145	123	131	143	152	127	135	148	157
85	1500	MBh	56.6	57.7	60.4	64.5	55.3	56.4	59.0	63.0	54.0	55.0	57.6	61.5	52.7	53.7	56.2	60.0	50.0	51.0	53.4	57.0	46.3	47.2	49.5	52.8
		S/T	0.86	0.83	0.75	0.61	0.89	0.86	0.77	0.63	0.91	0.88	0.79	0.64	0.94	0.91	0.82	0.66	0.98	0.94	0.85	0.69	0.98	0.95	0.86	0.70
		ΔT	30	29	28	24	30	30	28	24	30	30	28	24	30	30	28	24	30	29	28	24	28	28	26	23
		kW	4.07	4.15	4.28	4.42	4.38	4.48	4.62	4.77	4.66	4.76	4.92	5.08	4.90	5.01	5.18	5.35	5.11	5.23	5.40	5.59	5.29	5.41	5.59	5.79
		Amps	15.8	16.2	16.7	17.4	17.1	17.6	18.2	18.9	18.7	19.1	19.8	20.5	20.0	20.5	21.2	22.0	21.3	21.8	22.6	23.5	22.6	23.2	24.0	24.9
		HI PR	235	253	267	279	264	284	300	313	300	323	341	355	342	368	388	405	384	414	437	455	425	457	482	503
		LO PR	101	107	117	125	107	113	124	132	111	118	129	137	116	124	135	144	122	130	142	151	126	134	146	156
	1750	MBh	58.3	59.4	62.2	66.4	56.9	58.1	60.8	64.9	55.6	56.7	59.4	63.3	54.2	55.3	57.9	61.8	51.5	52.5	55.0	58.7	47.7	48.7	51.0	54.4
		S/T	0.90	0.87	0.78	0.64	0.93	0.90	0.81	0.66	0.96	0.92	0.83	0.68	0.99	0.95	0.86	0.70	1.00	0.99	0.89	0.72	1.00	1.00	0.90	0.73
		ΔT	28	27	26	22	28	27	26	22	28	27	26	22	28	28	26	23	27	27	26	22	25	25	24	21
		kW	4.10	4.19	4.32	4.46	4.42	4.51	4.66	4.81	4.70	4.80	4.96	5.12	4.95	5.06	5.22	5.40	5.16	5.27	5.45	5.63	5.34	5.46	5.64	5.84
		Amps	16.0	16.4	16.9	17.6	17.3	17.7	18.3	19.0	18.8	19.3	20.0	20.7	20.2	20.7	21.4	22.2	21.5	22.0	22.8	23.7	22.8	23.4	24.2	25.1
		HI PR	237	255	270	281	266	287	303	316	303	326	344	359	345	371	392	409	388	418	441	460	429	461	487	508
		LO PR	102	108	118	126	108	114	125	133	112	119	130	138	117	125	136	145	123	131	143	152	127	135	148	157
	2000	MBh	58.6	59.7	62.5	66.7	57.2	58.3	61.1	65.2	55.9	56.9	59.6	63.6	54.5	55.6	58.2	62.1	51.8	52.8	55.3	59.0	48.0	48.9	51.2	54.6
		S/T	0.91	0.88	0.79	0.64	0.94	0.91	0.82	0.67	0.97	0.93	0.84	0.68	1.00	0.96	0.87	0.71	1.00	1.00	0.90	0.73	1.00	1.00	0.91	0.74
		ΔT	25	24	23	20	25	24	23	20	25	24	23	20	25	25	23	20	24	24	23	20	22	22	21	19
		kW	4.13	4.22	4.35	4.50	4.45	4.55	4.70	4.85	4.74	4.84	5.00	5.17	4.99	5.10	5.27	5.45	5.20	5.32	5.49	5.68	5.38	5.50	5.69	5.89
		Amps	16.1	16.5	17.1	17.7	17.5	17.9	18.5	19.2	19.0	19.5	20.1	20.9	20.4	20.9	21.6	22.4	21.7	22.2	23.0	23.9	23.0	23.6	24.4	25.4
		HI PR	240	258	272	284	269	289	306	319	306	329	348	363	348	375	396	413	392	422	445	465	433	466	492	513
		LO PR	103	109	119	127	109	116	126	134	113	120	131	140	119	126	138	147	124	132	144	154	129	137	149	159

IDB: Entering Indoor Dry Bulb Temperature
High and low pressures are measured at the liquid and suction service valves.

Shaded area is AHRI conditions.

KW=Total system power
Amps = outdoor unit amps (comp.+fan)

Expanded Cooling Data — DX13SA0604**/CA*F4961*6D*+EEP

			Outdoor Ambient Temperature																							
			65				75				85				95				105				115			
			Entering Indoor Wet Bulb Temperature																							
IDB	Airflow		59	63	67	71	59	63	67	71	59	63	67	71	59	63	67	71	59	63	67	71	59	63	67	71
70	1500	MBh	53.8	55.7	61.0	-	52.5	54.4	59.6	-	51.3	53.1	58.2	-	50.0	51.8	56.8	-	47.5	49.2	53.9	-	44.0	45.6	50.0	-
		S/T	0.66	0.55	0.38	-	0.68	0.57	0.39	-	0.70	0.58	0.40	-	0.72	0.60	0.42	-	0.75	0.62	0.43	-	0.75	0.63	0.44	-
		ΔT	22	19	14	-	22	19	14	-	22	19	14	-	22	19	14	-	22	19	14	-	20	18	13	-
		kW	3.97	4.05	4.18	-	4.27	4.37	4.51	-	4.54	4.64	4.80	-	4.78	4.89	5.05	-	4.99	5.10	5.27	-	5.16	5.28	5.45	-
		Amps	15.4	15.8	16.3	-	16.7	17.1	17.6	-	18.1	18.6	19.2	-	19.4	19.9	20.6	-	20.7	21.2	21.9	-	22.0	22.5	23.3	-
		HI PR	228	245	259	-	256	275	291	-	291	313	331	-	331	357	377	-	373	401	424	-	412	443	468	-
		LO PR	98	104	114	-	103	110	120	-	107	114	125	-	113	120	131	-	118	126	137	-	122	130	142	-
	1750	MBh	55.4	57.4	62.9	-	54.1	56.1	61.4	-	52.8	54.7	59.9	-	51.5	53.4	58.5	-	48.9	50.7	55.6	-	45.3	47.0	51.5	-
		S/T	0.69	0.57	0.40	-	0.71	0.60	0.41	-	0.73	0.61	0.42	-	0.75	0.63	0.44	-	0.78	0.65	0.45	-	0.79	0.66	0.46	-
		ΔT	20	17	13	-	20	18	13	-	20	18	13	-	20	18	13	-	20	17	13	-	19	16	12	-
		kW	4.00	4.09	4.21	-	4.31	4.40	4.54	-	4.58	4.68	4.84	-	4.82	4.93	5.09	-	5.03	5.14	5.31	-	5.20	5.32	5.50	-
		Amps	15.5	15.9	16.4	-	16.8	17.2	17.8	-	18.3	18.8	19.4	-	19.6	20.1	20.8	-	20.9	21.4	22.2	-	22.2	22.7	23.5	-
		HI PR	230	248	262	-	258	278	294	-	294	316	334	-	335	360	380	-	377	405	428	-	416	448	473	-
		LO PR	99	105	115	-	104	111	121	-	108	115	126	-	114	121	132	-	119	127	139	-	124	131	143	-
	2000	MBh	55.6	57.7	63.2	-	54.3	56.3	61.7	-	53.0	55.0	60.2	-	51.8	53.6	58.8	-	49.2	51.0	55.8	-	45.5	47.2	51.7	-
		S/T	0.70	0.58	0.40	-	0.72	0.60	0.42	-	0.74	0.62	0.43	-	0.77	0.64	0.44	-	0.79	0.66	0.46	-	0.80	0.67	0.46	-
		ΔT	18	15	12	-	18	16	12	-	18	16	12	-	18	16	12	-	18	16	12	-	17	15	11	-
		kW	4.03	4.12	4.25	-	4.34	4.44	4.58	-	4.62	4.72	4.88	-	4.86	4.97	5.13	-	5.07	5.18	5.36	-	5.25	5.37	5.55	-
		Amps	15.7	16.0	16.6	-	17.0	17.4	18.0	-	18.5	18.9	19.6	-	19.8	20.3	21.0	-	21.1	21.6	22.4	-	22.4	22.9	23.7	-
		HI PR	233	250	264	-	261	281	297	-	297	319	337	-	338	364	384	-	380	409	432	-	420	452	477	-
		LO PR	100	106	116	-	105	112	122	-	110	117	127	-	115	122	134	-	121	128	140	-	125	133	145	-
75	1500	MBh	54.7	56.3	60.9	65.4	53.4	55.0	59.5	63.9	52.1	53.7	58.1	62.3	50.9	**52.4**	56.7	60.8	48.3	49.7	53.8	57.8	44.7	46.1	49.9	53.5
		S/T	0.75	0.67	0.50	0.32	0.77	0.69	0.52	0.34	0.79	0.71	0.54	0.35	0.82	**0.73**	0.55	0.36	0.85	0.76	0.57	0.37	0.86	0.77	0.58	0.37
		ΔT	25	23	19	13	25	23	19	13	25	23	19	13	26	**23**	19	13	25	23	19	13	23	22	18	12
		kW	4.00	4.09	4.22	4.35	4.31	4.40	4.55	4.69	4.58	4.68	4.84	5.00	4.82	**4.93**	5.09	5.26	5.03	5.14	5.31	5.49	5.20	5.32	5.50	5.69
		Amps	15.5	15.9	16.4	17.1	16.8	17.2	17.8	18.5	18.3	18.8	19.4	20.2	19.6	**20.1**	20.8	21.6	20.9	21.4	22.2	23.0	22.2	22.7	23.5	24.4
		HI PR	230	248	262	273	258	278	294	306	294	316	334	348	335	**360**	380	397	377	405	428	446	416	448	473	493
		LO PR	99	105	115	122	104	111	121	129	108	115	126	134	114	**121**	132	141	119	127	139	148	124	131	143	153
	1750	MBh	56.3	58.0	62.7	67.3	55.0	56.6	61.3	65.8	53.7	55.3	59.8	64.2	52.4	**53.9**	58.4	62.6	49.8	51.2	55.5	59.5	46.1	47.5	51.4	55.1
		S/T	0.78	0.70	0.53	0.34	0.81	0.72	0.55	0.35	0.83	0.74	0.56	0.36	0.86	**0.77**	0.58	0.37	0.89	0.80	0.60	0.39	0.90	0.80	0.61	0.39
		ΔT	23	21	17	12	23	22	18	12	23	22	18	12	24	**22**	18	12	23	21	18	12	22	20	16	11
		kW	4.03	4.12	4.25	4.39	4.34	4.44	4.58	4.73	4.62	4.72	4.88	5.04	4.86	**4.97**	5.14	5.31	5.07	5.18	5.36	5.54	5.25	5.37	5.55	5.74
		Amps	15.7	16.1	16.6	17.2	17.0	17.4	18.0	18.7	18.5	18.9	19.6	20.3	19.8	**20.3**	21.0	21.8	21.1	21.6	22.4	23.2	22.4	22.9	23.7	24.7
		HI PR	233	250	264	276	261	281	297	309	297	320	337	352	338	**364**	384	401	380	409	432	451	420	452	478	498
		LO PR	100	106	116	123	105	112	122	130	110	117	127	136	115	**122**	134	142	121	128	140	149	125	133	145	154
	2000	MBh	56.6	58.3	63.1	67.7	55.3	56.9	61.6	66.1	53.9	55.5	60.1	64.5	52.6	**54.2**	58.7	63.0	50.0	51.5	55.7	59.8	46.3	47.7	51.6	55.4
		S/T	0.79	0.71	0.54	0.35	0.82	0.73	0.56	0.36	0.84	0.75	0.57	0.37	0.87	**0.78**	0.59	0.38	0.90	0.81	0.61	0.39	0.91	0.81	0.62	0.40
		ΔT	21	19	16	11	21	19	16	11	21	19	16	11	21	**19**	16	11	21	19	16	11	19	18	15	10
		kW	4.06	4.15	4.28	4.42	4.38	4.48	4.62	4.77	4.66	4.76	4.92	5.08	4.90	**5.01**	5.18	5.35	5.11	5.23	5.40	5.59	5.29	5.41	5.59	5.78
		Amps	15.8	16.2	16.7	17.4	17.1	17.6	18.1	18.8	18.7	19.1	19.8	20.5	20.0	**20.5**	21.2	22.0	21.3	21.8	22.6	23.5	22.6	23.2	24.0	24.9
		HI PR	235	253	267	278	264	284	300	312	300	323	341	355	341	**367**	388	405	384	413	437	455	424	457	482	503
		LO PR	101	107	117	125	106	113	124	132	111	118	129	137	116	**124**	135	144	122	130	141	151	126	134	146	156

IDB: Entering Indoor Dry Bulb Temperature
High and low pressures are measured at the liquid and suction service valves.

Shaded area is ACCA (TVA) conditions.

KW=Total system power
Amps = outdoor unit amps (comp.+fan)

Expanded Cooling Data — DX13SA0604**/CA*F4961*6D*+EEP (cont.)

			Outdoor Ambient Temperature																							
			65				75				85				95				105				115			
			Entering Indoor Wet Bulb Temperature																							
IDB	Airflow		59	63	67	71	59	63	67	71	59	63	67	71	59	63	67	71	59	63	67	71	59	63	67	71
80	1500	MBh	55.6	56.9	60.7	64.9	54.3	55.5	59.3	63.4	53.0	54.2	57.9	61.9	51.8	52.9	**56.5**	60.4	49.2	50.2	53.7	57.4	45.5	46.5	49.7	53.2
		S/T	0.82	0.77	0.62	0.47	0.85	0.80	0.65	0.48	0.87	0.82	0.66	0.50	0.90	0.84	**0.69**	0.51	0.93	0.87	0.71	0.53	0.94	0.88	0.72	0.54
		ΔT	28	27	23	19	28	27	24	19	28	27	24	19	28	27	**24**	19	28	27	23	19	26	25	22	17
		kW	4.03	4.12	4.25	4.39	4.35	4.44	4.58	4.73	4.62	4.72	4.88	5.04	4.86	4.97	**5.14**	5.31	5.07	5.18	5.36	5.54	5.25	5.37	5.55	5.74
		Amps	15.7	16.1	16.6	17.2	17.0	17.4	18.0	18.7	18.5	18.9	19.6	20.3	19.8	20.3	**21.0**	21.8	21.1	21.6	22.4	23.2	22.4	22.9	23.7	24.7
		HI PR	233	250	264	276	261	281	297	309	297	320	337	352	338	364	**384**	401	380	409	432	451	420	452	478	498
		LO PR	100	106	116	123	105	112	122	130	110	117	127	136	115	122	**134**	142	121	128	140	149	125	133	145	154
	1750	MBh	57.3	58.6	62.6	66.9	56.0	57.2	61.1	65.3	54.6	55.8	59.6	63.8	53.3	54.5	58.2	62.2	50.6	51.7	55.3	59.1	46.9	47.9	51.2	54.7
		S/T	0.86	0.80	0.65	0.49	0.89	0.83	0.68	0.51	0.91	0.85	0.70	0.52	0.94	0.88	0.72	0.54	1.00	0.92	0.75	0.56	1.00	0.92	0.75	0.56
		ΔT	26	25	22	17	26	25	22	17	26	25	22	17	26	25	22	18	27	25	22	17	25	23	20	16
		kW	4.07	4.15	4.28	4.42	4.38	4.48	4.62	4.77	4.66	4.76	4.92	5.08	4.90	5.01	5.18	5.35	5.11	5.23	5.40	5.59	5.29	5.41	5.59	5.79
		Amps	15.8	16.2	16.7	17.4	17.1	17.6	18.2	18.9	18.7	19.1	19.8	20.5	20.0	20.5	21.2	22.0	21.3	21.8	22.6	23.5	22.6	23.2	24.0	24.9
		HI PR	235	253	267	279	264	284	300	313	300	323	341	355	342	368	388	405	384	414	437	455	425	457	482	503
		LO PR	101	107	117	125	107	113	124	132	111	118	129	137	116	124	135	144	122	130	142	151	126	134	146	156
	2000	MBh	57.6	58.8	62.9	67.2	56.2	57.5	61.4	65.6	54.9	56.1	59.9	64.1	53.6	54.7	58.5	62.5	50.9	52.0	55.6	59.4	47.1	48.2	51.5	55.0
		S/T	0.87	0.82	0.66	0.50	0.90	0.85	0.69	0.51	0.92	0.87	0.71	0.53	0.95	0.89	0.73	0.54	1.00	0.93	0.76	0.56	1.00	0.94	0.76	0.57
		ΔT	23	22	19	15	23	22	19	16	23	22	19	16	23	23	20	16	23	22	19	15	22	21	18	14
		kW	4.10	4.19	4.32	4.46	4.42	4.51	4.66	4.81	4.70	4.80	4.96	5.12	4.94	5.06	5.22	5.40	5.16	5.27	5.45	5.63	5.34	5.46	5.64	5.84
		Amps	16.0	16.4	16.9	17.6	17.3	17.7	18.3	19.0	18.8	19.3	20.0	20.7	20.2	20.7	21.4	22.2	21.5	22.0	22.8	23.7	22.8	23.4	24.2	25.1
		HI PR	237	255	270	281	266	287	303	316	303	326	344	359	345	371	392	409	388	418	441	460	429	461	487	508
		LO PR	102	108	118	126	108	114	125	133	112	119	130	138	117	125	136	145	123	131	143	152	127	135	148	157
85	1500	MBh	56.6	57.7	60.4	64.5	55.3	56.4	59.0	63.0	54.0	55.0	57.6	61.5	52.7	53.7	56.2	60.0	50.0	51.0	53.4	57.0	46.3	47.2	49.5	52.8
		S/T	0.86	0.83	0.75	0.61	0.89	0.86	0.77	0.63	0.91	0.88	0.79	0.64	0.94	0.91	0.82	0.66	0.98	0.94	0.85	0.69	0.98	0.95	0.86	0.70
		ΔT	30	29	28	24	30	30	28	24	30	30	28	24	30	30	28	24	30	29	28	24	28	28	26	23
		kW	4.07	4.15	4.28	4.42	4.38	4.48	4.62	4.77	4.66	4.76	4.92	5.08	4.90	5.01	5.18	5.35	5.11	5.23	5.40	5.59	5.29	5.41	5.59	5.79
		Amps	15.8	16.2	16.7	17.4	17.1	17.6	18.2	18.9	18.7	19.1	19.8	20.5	20.0	20.5	21.2	22.0	21.3	21.8	22.6	23.5	22.6	23.2	24.0	24.9
		HI PR	235	253	267	279	264	284	300	313	300	323	341	355	342	368	388	405	384	414	437	455	425	457	482	503
		LO PR	101	107	117	125	107	113	124	132	111	118	129	137	116	124	135	144	122	130	142	151	126	134	146	156
	1750	MBh	58.3	59.4	62.2	66.4	56.9	58.1	60.8	64.9	55.6	56.7	59.4	63.3	54.2	55.3	57.9	61.8	51.5	52.5	55.0	58.7	47.7	48.7	51.0	54.4
		S/T	0.90	0.87	0.78	0.64	0.93	0.90	0.81	0.66	0.96	0.92	0.83	0.68	0.99	0.95	0.86	0.70	1.00	0.99	0.89	0.72	1.00	1.00	0.90	0.73
		ΔT	28	27	26	22	28	27	26	22	28	27	26	22	28	28	26	23	27	27	26	22	25	25	24	21
		kW	4.10	4.19	4.32	4.46	4.42	4.51	4.66	4.81	4.70	4.80	4.96	5.12	4.95	5.06	5.22	5.40	5.16	5.27	5.45	5.63	5.34	5.46	5.64	5.84
		Amps	16.0	16.4	16.9	17.6	17.3	17.7	18.3	19.0	18.8	19.3	20.0	20.7	20.2	20.7	21.4	22.2	21.5	22.0	22.8	23.7	22.8	23.4	24.2	25.1
		HI PR	237	255	270	281	266	287	303	316	303	326	344	359	345	371	392	409	388	418	441	460	429	461	487	508
		LO PR	102	108	118	126	108	114	125	133	112	119	130	138	117	125	136	145	123	131	143	152	127	135	148	157
	2000	MBh	58.6	59.7	62.5	66.7	57.2	58.3	61.1	65.2	55.9	56.9	59.6	63.6	54.5	55.6	58.2	62.1	51.8	52.8	55.3	59.0	48.0	48.9	51.2	54.6
		S/T	0.91	0.88	0.79	0.64	0.94	0.91	0.82	0.67	0.97	0.93	0.84	0.68	1.00	0.96	0.87	0.71	1.00	1.00	0.90	0.73	1.00	1.00	0.91	0.74
		ΔT	25	24	23	20	25	24	23	20	25	24	23	20	25	25	23	20	24	24	23	20	22	22	21	19
		kW	4.13	4.22	4.35	4.50	4.45	4.55	4.70	4.85	4.74	4.84	5.00	5.17	4.99	5.10	5.27	5.45	5.20	5.32	5.49	5.68	5.38	5.50	5.69	5.89
		Amps	16.1	16.5	17.1	17.7	17.5	17.9	18.5	19.2	19.0	19.5	20.1	20.9	20.4	20.9	21.6	22.4	21.7	22.2	23.0	23.9	23.0	23.6	24.4	25.4
		HI PR	240	258	272	284	269	289	306	319	306	329	348	363	348	375	396	413	392	422	445	465	433	466	492	513
		LO PR	103	109	119	127	109	116	126	134	113	120	131	140	119	126	138	147	124	132	144	154	129	137	149	159

IDB: Entering Indoor Dry Bulb Temperature
High and low pressures are measured at the liquid and suction service valves.

Shaded area is AHRI conditions.

KW=Total system power
Amps = outdoor unit amps (comp.+fan)

Outdoor Unit	Indoor Units	Cooling Ratings			SCFM	AHRI #
	Coils/Air Handlers	Total[1]	SEER[2]	EER[3]		
DX13SA 0363A*	ARUF37C14A*	34000	13.00	11.00	1050	7988968
	ARUF37D14A*	34400	13.00	11.00	1070	8875402
	ASPT37C14A*	35000	13.50	11.20	1100	8875380
	AWUF36XX16B*	33400	13.00	11.00	1150	6334381
	AWUF37XX16B*	34000	13.00	11.00	1200	6334382
	CA*F3636*6D*+EEP	35000	13.00	11.00	1200	6334383
	CA*F3642*6D*+MBVC1600**-1A*	35400	14.00	11.50	1200	6334384
	CA*F3743*6D*+EEP	34600	13.00	11.00	1200	6334385
	CA*F3743*6D*+EEP+TXV	34600	13.50	11.00	1200	6334386
	CA*F3743*6D*+MBVC1600**-1A*	35400	14.00	11.50	1200	6334387
	CHPF3636B6C*+EEP	35400	13.00	11.00	1200	6334388
	CHPF3642C6C*+EEP	35400	13.00	11.00	1200	6334389
	CHPF3642C6C*+MBVC1600**-1A*	35400	14.00	11.50	1200	6334390
	CSCF3036N6D*+EEP	35000	13.00	11.00	1200	6334392
	CSCF3642N6D*+EEP	35400	13.00	11.00	1200	6334393
DX13SA 0364A*	ARUF37C14A*	34000	13.00	11.00	1050	8482819
	ARUF37D14A*	34400	13.00	11.00	1070	8875403
	ASPT37C14A*	35000	13.5	11.2	1100	204471676
	AWUF36XX16B*	33400	13.00	11.00	1150	8482824
	AWUF37XX16B*	34000	13.00	11.00	1200	8482825
	CA*F3636*6D*+EEP	35000	13.00	11.00	1200	8338227
	CA*F3642*6D*+MBVC1600**-1A*	35400	14.00	11.50	1200	8482826
	CA*F3743*6D*+EEP	34600	13.00	11.00	1200	8482827
	CA*F3743*6D*+EEP+TXV	34600	13.50	11.00	1200	8482828
	CA*F3743*6D*+MBVC1600**-1A*	35400	14.00	11.50	1200	8482829
	CHPF3636B6C*+EEP	35400	13.00	11.00	1200	8482830
	CHPF3642C6C*+EEP	35400	13.00	11.00	1200	8482831
	CHPF3642C6C*+MBVC1600**-1A*	35400	14.00	11.50	1200	8482832
	CSCF3036N6D*+EEP	35000	13.00	11.00	1200	8482834
	CSCF3642N6D*+EEP	35400	13.00	11.00	1200	8377445
DX13SA 0483A*	ARUF49D14A*	45000	13.00	11.00	1455	8171750
	ASPT49D14A*	46000	14.00	11.30	1550	204471677
	CA*F4860*6D*+EEP	46000	13.00	11.00	1600	6334404
	CA*F4860*6D*+MBVC2000**-1A*	46000	14.00	11.30	1600	6334405
	CHPF4860D6D*+EEP	46000	13.00	11.00	1600	6334406
	CHPF4860D6D*+MBVC2000**-1A*	46000	14.00	11.30	1600	6334407
	CSCF4860N6D*+EEP	46000	13.00	11.00	1600	6334408
(2) DX13SA 0483A*	DAT09043A*	88000	14.00	11.50	3000	7500104
DX13SA 0484A*	ARUF49D14A*	45000	13.00	11.00	1450	8875404
	ASPT49D14A*	46000	14.00	11.30	1550	204471678
	CA*F4860*6D*+EEP	46000	13.00	11.00	1600	6334417
	CA*F4860*6D*+MBVC2000**-1A*	46000	14.00	11.30	1600	6334418
	CHPF4860D6D*+EEP	46000	13.00	11.00	1600	6334419
	CHPF4860D6D*+MBVC2000**-1A*	46000	14.00	11.30	1600	6334420
	CSCF4860N6D*+EEP	46000	13.00	11.00	1600	6334421
(2) DX13SA 0484A*	DAT09044A*	88000	14.00	11.50	3000	7500105

Outdoor Unit	Indoor Units	Cooling Ratings			SCFM	AHRI #
	Coils/Air Handlers	Total[1]	SEER[2]	EER[3]		
DX13SA 0603A*	ARUF61D14A*	55500	13.00	11.00	1520	8000271
	ASPT61D14A*	55500	13.50	11.50	1450	8875399
	CA*F4860*6D*+MBVC2000**-1A*+TXV	56000	14.00	11.50	1575	6334431
	CA*F4961*6D*+EEP	56500	13.00	11.00	1500	6334432
	CA*F4961*6D*+MBVC2000**-1A*	57000	14.00	11.50	1575	6334433
	CA*F4961*6D*+MBVC2000**-1A*+TXV	57000	14.00	12.00	1575	6334434
	CAPT4961*4A*+MBVC2000**-1A*	57000	14.00	12.00	1575	6334436
	CHPF4860D6D*+MBVC2000**-1A*	57000	14.00	11.50	1575	6334438
	CHPF4860D6D*+MBVC2000**-1A*+TXV	57000	14.00	11.50	1575	6334439
	CSCF4860N6D*+MBVC2000**-1A*+TXV	56000	14.00	11.50	1575	6334442
(2) DX13SA 0603A*	DAT12043A*	114000	14.00	11.20	4000	7500106
DX13SA 0604A*	ARUF61D14A*	55500	13	11	1520	8875401
	ASPT61D14A*	55500	13.5	11.5	1450	8875400
	CA*F4860*6D*+MBVC2000**-1A*+TXV	56000	14.00	11.50	1575	6334450
	CA*F4961*6D*+MBVC2000**-1A*	57000	14.00	11.50	1575	6334452
	CA*F4961*6D*+MBVC2000**-1A*+TXV	57000	14.00	12.00	1575	6334453
	CA*F4961*6D+EEP	56500	13.00	11.00	1500	6334451
	CAPT4961*4A*+MBVC2000**-1A*	57000	14.00	12.00	1575	6334455
	CHPF4860D6D*+MBVC2000**-1A*	57000	14.00	11.50	1575	6334457
	CHPF4860D6D*+MBVC2000**-1A*+TXV	57000	14.00	11.50	1575	6334458
	CSCF4860N6D*+MBVC2000**-1A*+TXV	56000	14.00	11.50	1575	6334461
(2) DX13SA 0604A*	DAT12044A*	114000	14.00	11.20	4000	7500107

[1] BTU/h

[2] Seasonal Energy Efficiency Ratio; Certified per AHRI 210/240 @ 80°F/ 67°F/ 95°F

[3] Energy Efficiency Ratio @ 80°F/ 67°F/ 95°F

Notes

- Always check the S&R plate for electrical data on the unit being installed.
- When matching the outdoor unit to the indoor unit, use the piston supplied with the outdoor unit or that specified on the piston kit chart supplied with the indoor unit.
- EEP - Order from Service Dept. Part No. B13707-38 or new Solid State Board B13707-35S. Part No. B13707-38 is not interchangeable with B13707-35S. The Daikin brand gas furnace contains the EEP cooling time delay

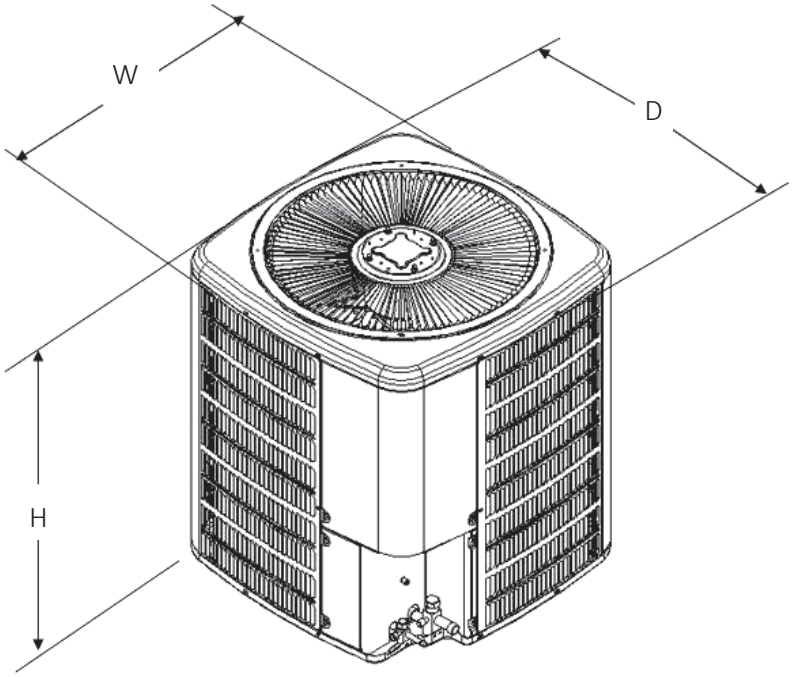

Model	Dimensions		
	W	D	H
DX13SA0363A*	29"	29"	28¾"
DX13SA0364A*	29"	29"	28¾"
DX13SA0483A*	29"	29"	36¼"
DX13SA0484A*	29"	29"	36¼"
DX13SA0603A*	35½"	35½"	38¼"
DX13SA0604A*	35½"	35½"	38¼"

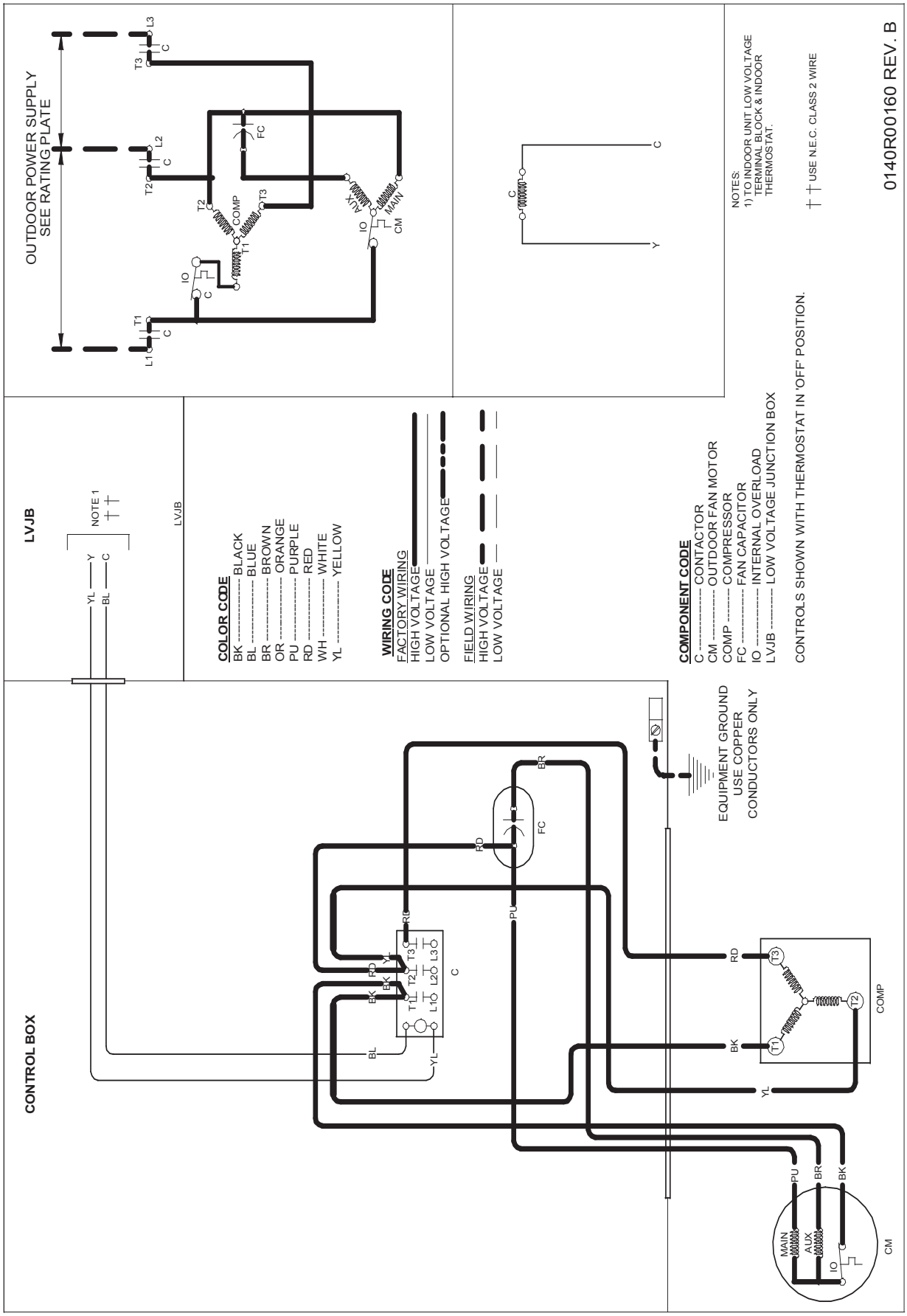

WARNING **High Voltage:** Disconnect all power before servicing or installing this unit. Multiple power sources may be present. Failure to do so may cause property damage, personal injury, or death.

Wiring is subject to change. Always refer to the wiring diagram on the unit for the most up-to-date wiring.

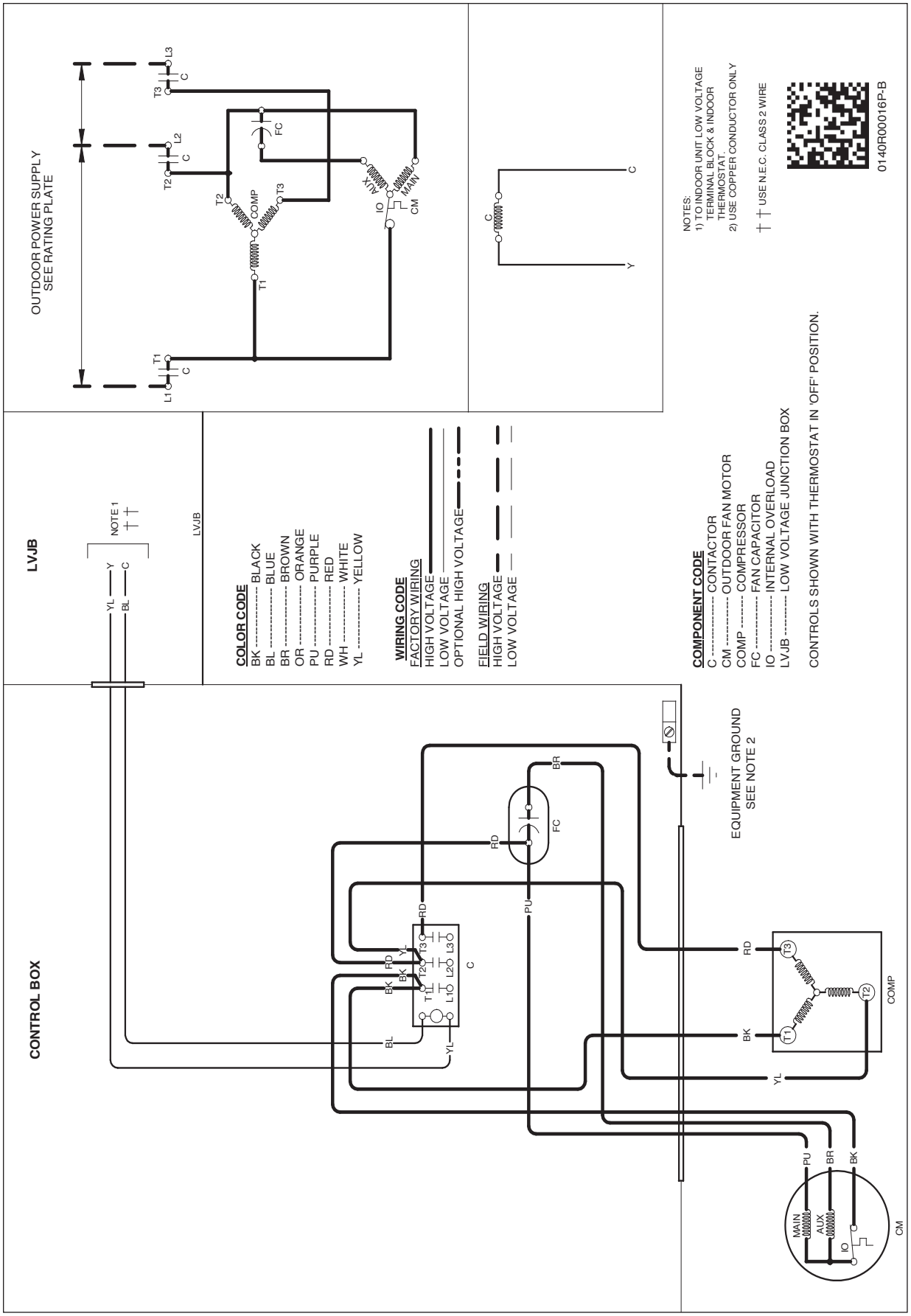

WARNING

High Voltage: Disconnect all power before servicing or installing this unit. Multiple power sources may be present. Failure to do so may cause property damage, personal injury, or death.

Wiring is subject to change. Always refer to the wiring diagram or the unit for the most up-to-date wiring.

Model #	Description	DX13SA 0363**	DX13SA 0364**	DX13SA 0483**	DX13SA 0484*	DX13SA 0603**	DX13SA 0604**
ABK-20	Anchor Bracket Kit ^	x	x	x	x	x	x
ASC-01	Anti-Short Cycle Kit	x	x	x	x	x	x
FSK01A[1]	Freeze Protection Kit [2]	x	x	x	x	x	x
LSK01A[2]	Liquid Line Solenoid Kit	x	x	x	x	x	x
LAKT01	Low Ambient Kit	x	x	x	x	x	x
0163R00002	Crankcase heater	x					
0163R00003	Crankcase heater			x		x	
0163R00004	Crankcase Heater				x		x
0163R00031	Crankcase Heater		x				
OY18-60A	Outdoor Thermostat	x	x	x	x	x	x
TX3N4[2]	TXV Kit	x	x				
TX5N4[2]	TXV Kit			x	x	x	x

^ Contains 20 brackets; four brackets needed to anchor unit to pad

[1] Installed on indoor coil

[2] Field-installed, non-bleed, expansion valve kit — Condensing units and heat pumps with reciprocating compressors require the use of start-assist components when used in conjunction with an indoor coil using a non-bleed thermal expansion valve refrigerant metering device or liquid line solenoid kit. The TXV should always be sized based on the tonnage of the outdoor unit.

Our continuing commitment to quality products may mean a change in specifications without notice.
© 2019 DAIKIN MANUFACTURING COMPANY, L.P. • Houston, Texas • Printed in the USA.